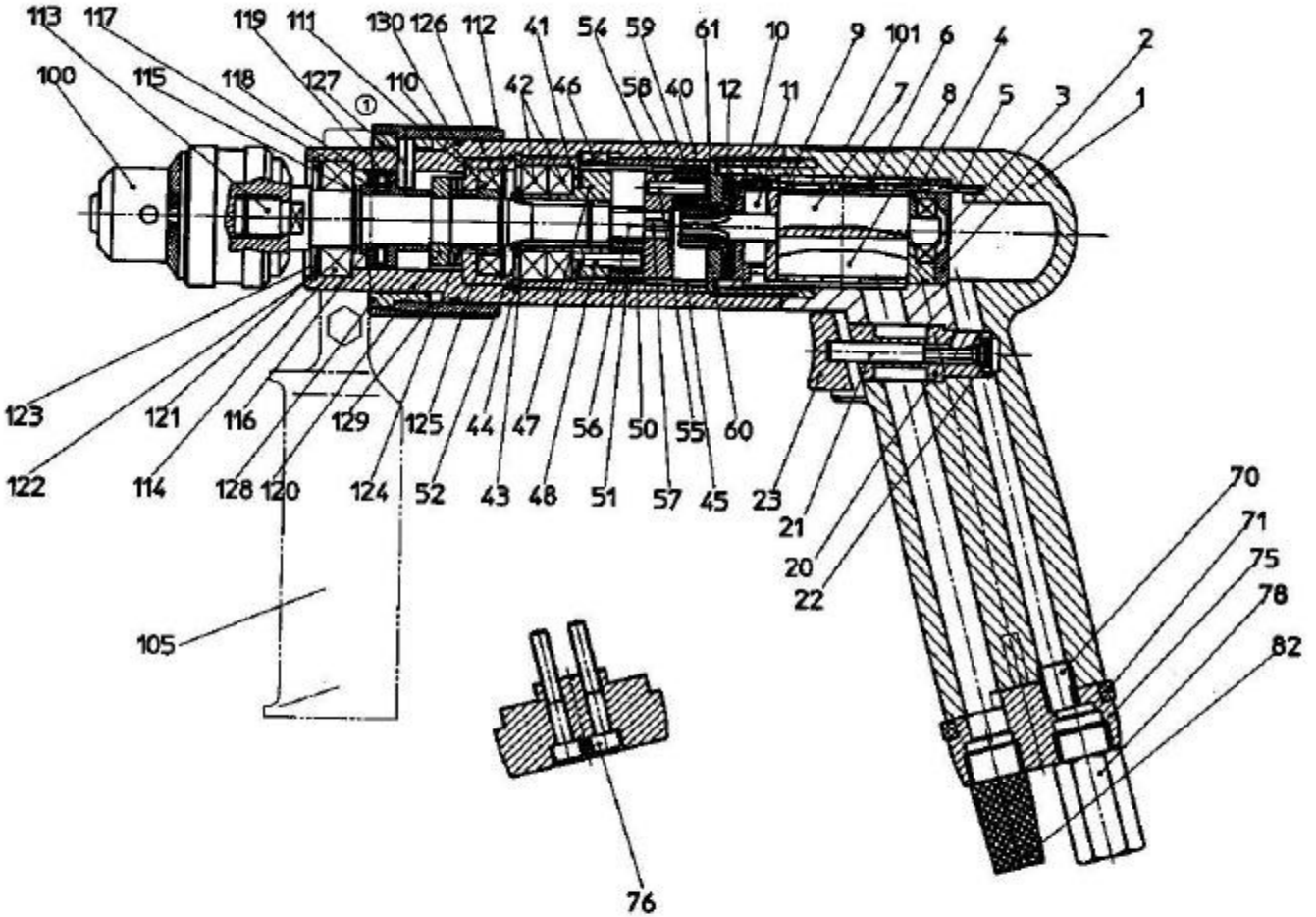

CS UNITEC, INC.
22 Harbor Avenue
Norwalk, CT 06850
Website: www.csunitec.com
Email: info@csunitec.com

AIR HAMMER DRILL
2 1262 0010

CS UNITEC

Air Hammer Drill Model 2 1262 0010
Parts List
Product Group: A

Effective: 8/16/2005

Prices to change without notice.
Not responsible for typographical errors.

POS. NO.	ITEM NO.	DESCRIPTION	
	2 1253 4030	Planet Carrier	
	3 7663 4940	Planet Carrier Assembly	with Pos. 54-57
	9 3502 0140	Heli-Coil	
48+55	9 1019 0200	Bearing Needle	
50+58	9 1015 0950	Needle Cage	
1	2 1260 6910	Housing	
2	1 3501 1120	Cover	
3	9 1001 0450	SEE # 9 1001 0460	
4	2 1250 1110	Rear Plate	
5	9 1637 1890	Locking Pin	
6	2 1250 1020	Cylinder Bushing	
7	1 3801 1030	Rotor	
8	3 8601 1050	Vane (5 Required)	
9	2 1250 1060	Front Plate	
10	1 3801 1070	Bearing Washer	
11	9 1001 0040	Bearing	
12	9 1801 0330	Spring, Belleville	
13	9 1901 2680	O-Ring	
20	2 1250 3050	Valve Bushing	
21	2 1250 3030	Valve Control	
22	9 1901 2280	O-Ring	
23	2 1260 3040	Trigger	
24	9 1901 3410	O Ring	
40	2 1253 4010	Gearbox Casing	
41	3 7661 4180	Roller Ring	
42	9 1002 0260	Bearing	
43	9 3331 0550	Fitting Washer	
44	9 1703 0120	Snap Ring	4-26-16-003-00-2
45	3 7663 4020	Rim of the Gear	
46	9 1501 3640	Feather Key	
47	2 1253 4930	Planet Carrier Assembly	
51	3 7663 4040	Planetary Wheel	
52	9 1702 0100	Snap Ring	
54	3 7662 4130	Planet Carrier	
56	3 7663 4370	Pinion	
57	9 1501 1040	Feather Key	
59	3 7652 4040	Planetary Wheel	
60	3 7652 4080	Starting Disc	
61	3 7661 4170	Pinion	
70	2 1250 3330	Guide Sleeve Assembly	
71	2 1260 3410	Intermediate Ring	
75	2 1260 3070	Air and Damp Connector	
76	255 650	Screw, Lens Head	

CS Unitec, Inc.
22 Harbor Ave, Norwalk, CT 06850
Telephone: 203-853-9522 Toll Free: 800-700-5919 Fax: 203-853-9921
WebSite: www.csunitec.com E-Mail: info@csunitec.co

CS UNITEC

Air Hammer Drill Model 2 1262 0010
Parts List
Product Group: A

Effective: 8/16/2005

Prices to change without notice.
Not responsible for typographical errors.

POS. NO.	ITEM NO.	DESCRIPTION
78	9 2205 1320	Nipple, Adapting
82	9 3801 0120	Muffler, 3/8"
100	9 2911 0040	Drill Chuck
105	1 3906 6920	Extra Handle
110	2 1253 7100	Roller Ring
111	9 1027 0260	Grooved Ball Bearing
112	9 1703 0100	Snap Ring
113	2 1253 7030	Output Shaft
114	9 1003 0230	Grooved Ball Bearing
116	2 1253 7070	Ring
117	9 1024 0150	Axial Washer
118	9 1024 0160	Axial Needle Cage
119	2 1253 7080	Thrust Bearing Sleeve
120	2 1253 7090	Impact Ring
121	9 3314 0260	Spring Washer
122	9 3325 0950	End Plate
123	9 1703 0110	Retaining Ring
124	9 1803 0630	Compression Spring
125	2 1253 7130	Bearing
126	254 045	C-Clip
127	9 1019 0450	Needle Roller
128	2 1253 7110	Adjusting Ring
129	2 1262 7120	Bushing
130	9 1901 3080	O-Ring

CS Unitec, Inc.
22 Harbor Ave, Norwalk, CT 06850
Telephone: 203-853-9522 Toll Free: 800-700-5919 Fax: 203-853-9921
WebSite: www.csunitec.com E-Mail: info@csunitec.co