Hydraulic
Rotary Hammer Drill
Type 2 2418 0010

Techn. Doc. No. 262

Illustration can differ from the original

Repair Manual and
Spare Parts List

Repair

General
In general, observe the safety regulations and instructions: refer to the operation manual.
The disassembly and re-assembly is done only according to the technical drawing.
In case of damages, our service is at your disposal.

Do not disassemble the tool until you know whether the problem is in one of the modules.
Then disassemble the tool only as necessary to repair as required. Keep contaminants such as dirt and grit away from the internal parts at all times.

Always identify and correct the cause of the problem prior to re-assembling. Further wear and tool failure can result, if the original cause is not corrected.

Information for exact identification of the problem is given in the unit “Troubleshooting” of the operation manual.

Notice: The particular installation direction of the parts mentioned in the following process instructions is indicated in the drawings and the parts lists at the end of this instruction.

Re-assembly
Before starting reassembly, check all parts for wear and replace them, if necessary. Wear parts are in particular o-rings, radial shaft seals and bearings.

We recommend changing the grease in the gear housing after 300 hours of operation.
Use special-purpose gear grease only:

Consistency class (DIN 51818)	2
Saponification type	Lithium
Worked penetration	265 to 295
Temperature range	-25°C to +125°C

The proper quantity of grease is very important from the point of good lubrication and low heat generation.
The grease quantities listened in the following table must be complied with:

Grease	Quantity in grams
In the crank casing	5
In the bevel gear	5
In the spur gear	10
In the planetary gear	10
Grease SPITZNAS reference no. 9 9902 0130 (400 g), 9 9902 0250 (100 g)	

Spare Parts
Only genuine Spitznas spare parts may be used.
There is no warranty for damages and liability is disclaimed by Spitznas, if non-original spare parts and accessories are used.

Spare Parts List

Benennung:	Part and drawing number:
Hydraulic Rotary Hammer Drill	**2 2418 0010**

Item	Qty.	Description	Part and drawing no.		Remarks
		Hydraulic rotary hammer drill 2 2418 0010			
		consisting of:			
	1	Hydraulic drive	2 2418 1000		see extra list
	1	Gearbox	2 2418 4000		see extra list
	1	Typ label	9 3101 0040		
	2	Round head grooved pin	9 1628 0040		
	1	Hammer grease Spitznas Long-Life C 1	9 9902 0250		
	1	Hexagonal screw driver SW 4	9 1314 0040		
	1	Carrying case	9 9910 0080		
	1	Multi oil spray	9 9902 0120		
	1	Hydraulic hose set	2 2406 9010		
	1	Sign	9 3101 0570		
	1	Sticker	9 3104 0380		
		Accessories: Hammer drill			
	1	SDS max Ø16 x 340 shank Ø18	9 2513 1850		

Spare Parts List

Description:	Sach- und Zeichnungsnummer:
Hydraulic **Rotary Hammer Drill**	**2 2418 0010**

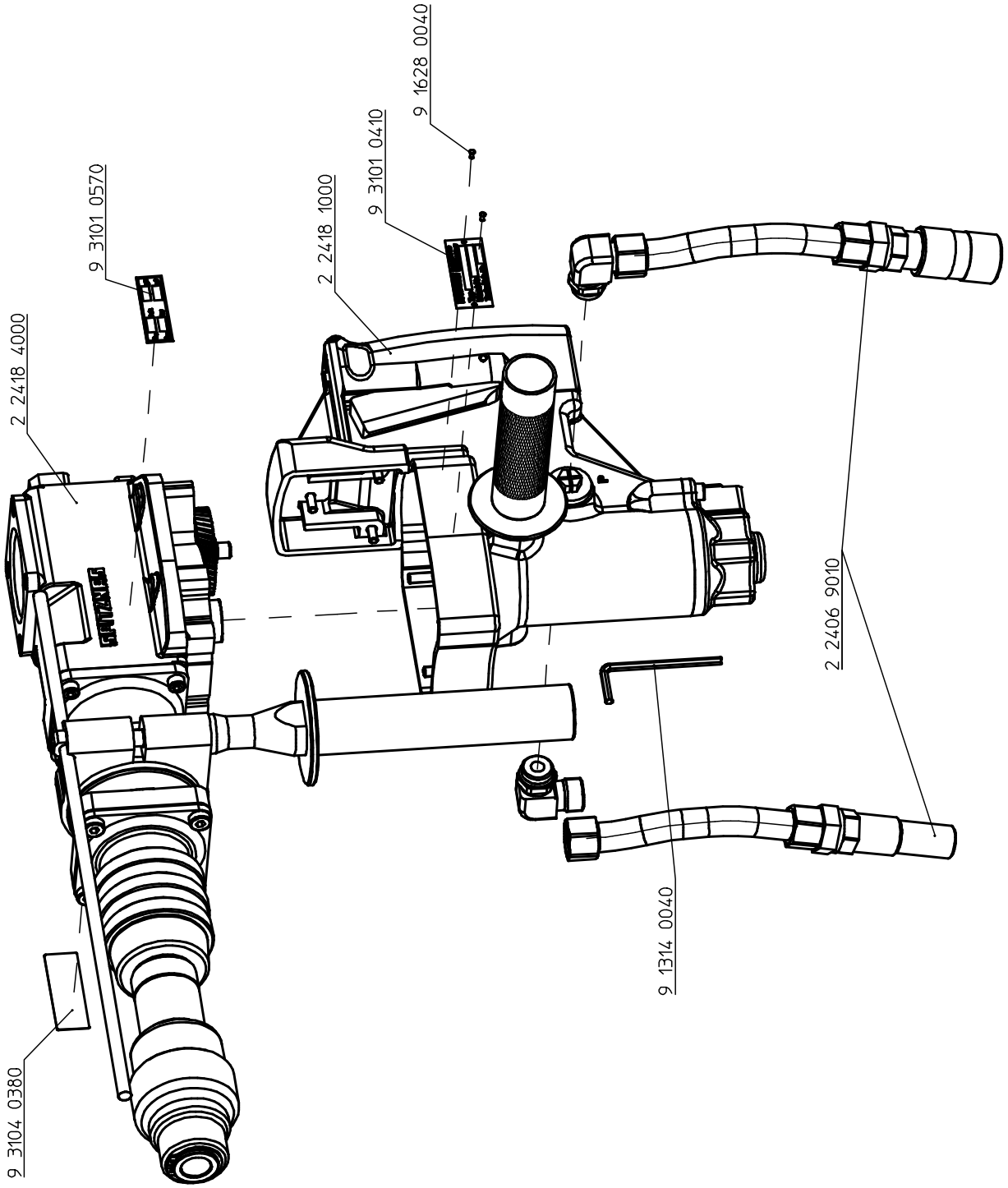

Spare Parts List

Description:	Part and drawing number:
Hydraulic Drive	**2 2418 1000**

Item	Qty.	Description	Part and drawing no.		Remarks
100	1	Hydraulic motor	9 5501 0130		see extra list
150	1	Motor housing, assy.	2 2407 1910		with item 115
115	1	Bushing	9 1029 0530		
151	1	Drive housing, assy.	2 2418 4910		with item 301
301	1	Governor sleeve	2 1317 3310		
152	1	Motor cover, assy.	2 2407 1930		with item 172
172	2	Threaded pin	9 1140 5080		
153	1	Stop disc	2 2407 4180		
154	1	Pinion shaft	2 2418 4170		
155	1	Gear rim	2 2407 4220		
156	1	Pinion	2 2407 4370		
157	1	Planet wheel, assy.	3 8837 4920		
158	6	Planet wheel	3 8837 4140		
159	6	Needle cage	9 1015 0790	*	
160	1	Grooved ball bearing	9 1005 0200	*	
161	1	Washer	2 2407 4150		
162	1	Snap ring	9 1702 0080		
163	1	Snap ring	9 1702 0130		
164	2	Socket head screw	9 1110 4390		
165	1	Cylinder pin	9 1619 1700		
166	1	Planet carrier, assy.	2 2407 4920		
167	2	Cylinder pin	9 1619 0450		
168	1	Drive shaft	2 2406 1050		
169	5	Socket head screw	9 1110 4160		
170	2	O-ring	9 1921 4410	*	
171	2	Plug	9 3401 1090		
174	1	Needle sleeve	9 1014 0470		
175	6	Socket head screw	9 1112 4060		
176	1	Sealing	2 2414 1160	*	
177	1	O-ring	9 1921 2020	*	
302	1	Gate	5 1220 3050		

Spare Parts List

Description:	Part and drawing number:
Hydraulic Drive	**2 2418 1000**

Item	Qty.	Description	Part and drawing no.		Remarks
303	1	Washer	9 3302 0030		
304	1	Pressure spring	9 1803 3590		
327	1	Locking washer	9 1706 0140		
330	1	Valve insert, assy.	2 1317 3300		see extra list
608	1	Handle, assy.	2 2406 7000		see extra list
609	1	Connection lug	2 2407 6040		
610	2	Counter sunk screw with i. hexagon	9 1113 3030		
611	1	Gasket	9 1903 0270	*	
612	5	Socket head screw	9 1110 3120		
613	1	Handle	2 2418 6000		
		* Wear parts to be stored in case of			
		continuous use!			

Spare Parts List

Description:	Part and drawing number:
Hydraulic Drive	**2 2418 1000**

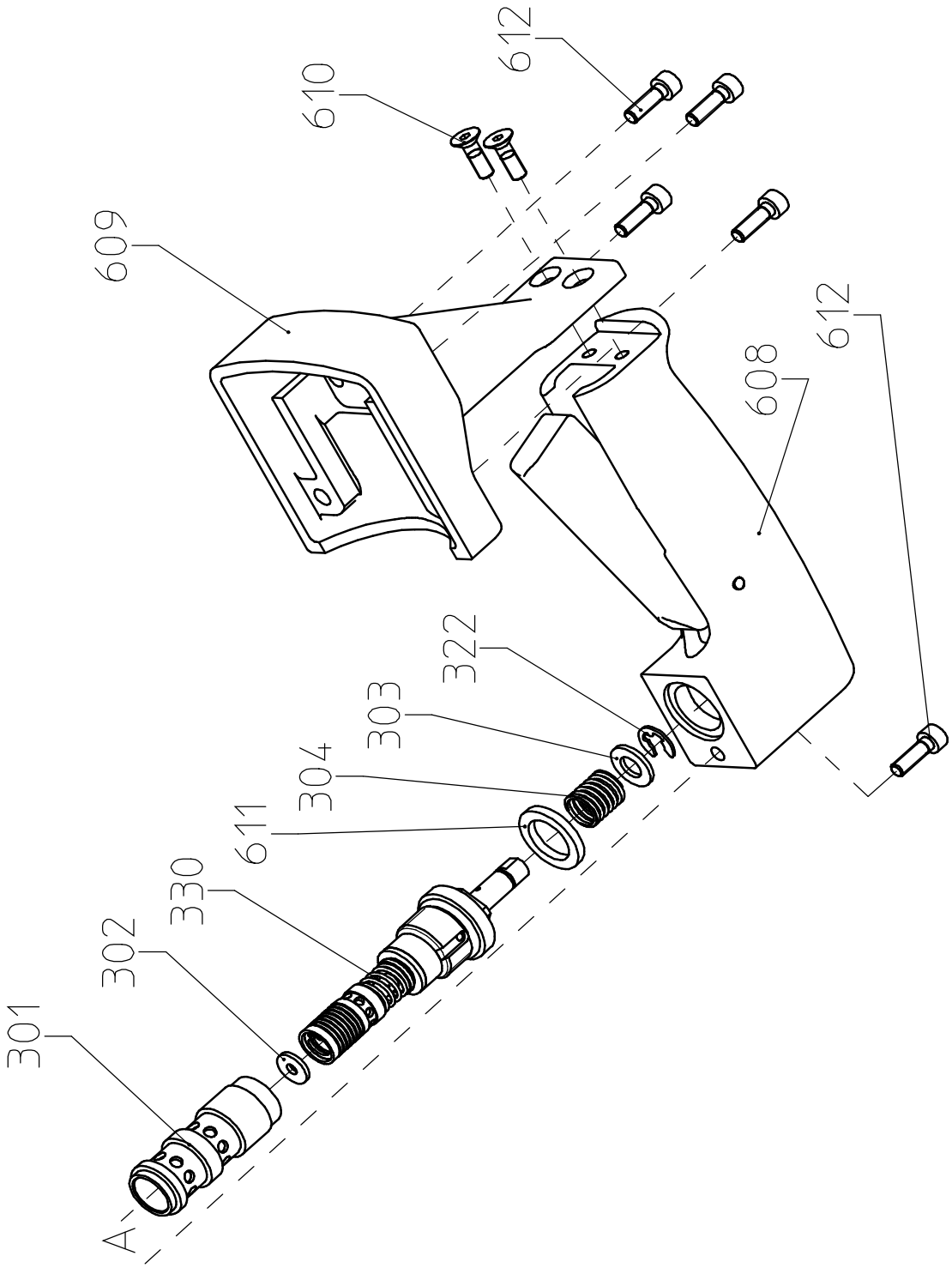

Spare Parts List

Description:	Part and drawing number:
Hydraulic **Drive**	**2 2418 1000**

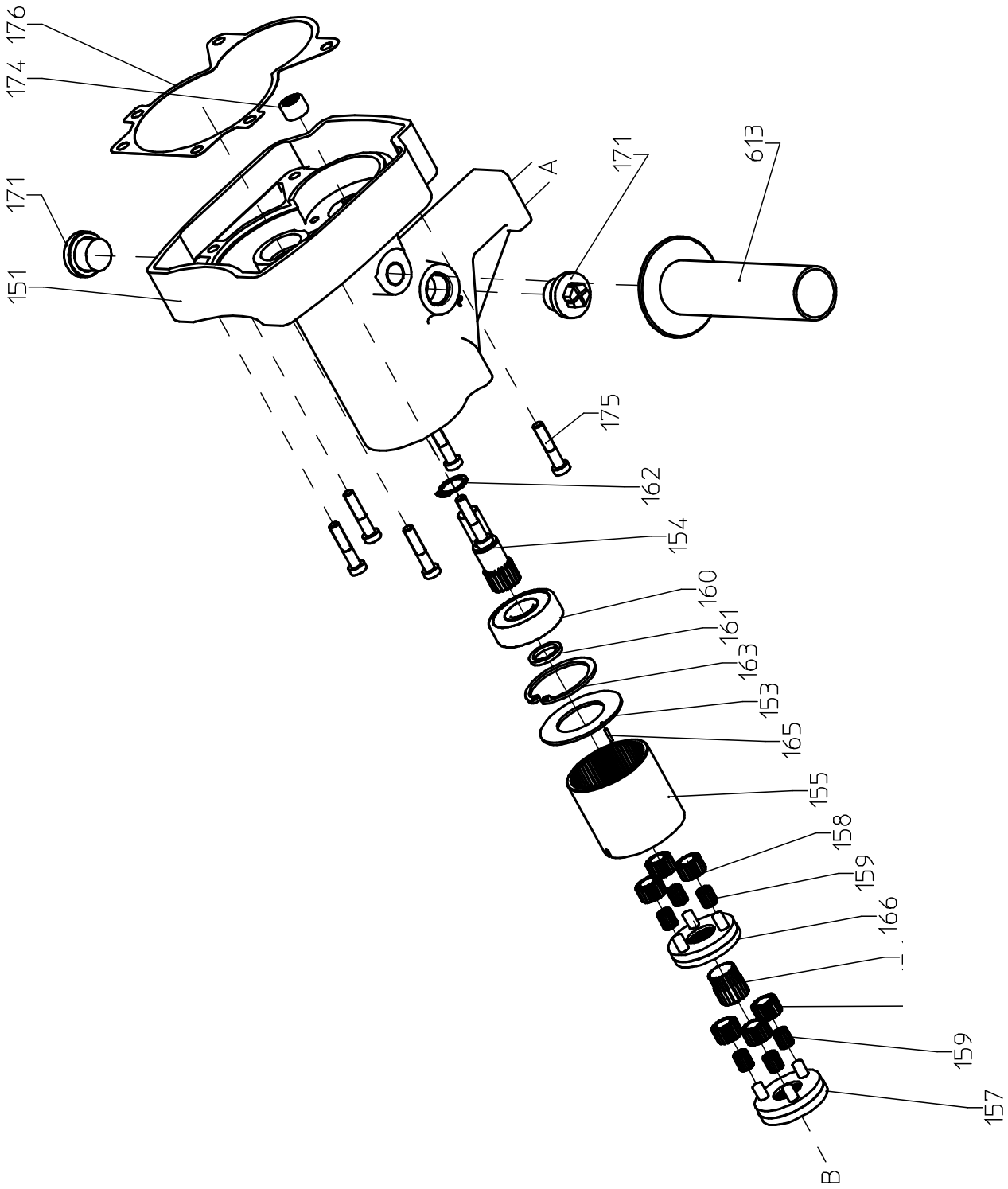

Spare Parts List

Description:	Part and drawing number:
Hydraulic Drive	**2 2418 1000**

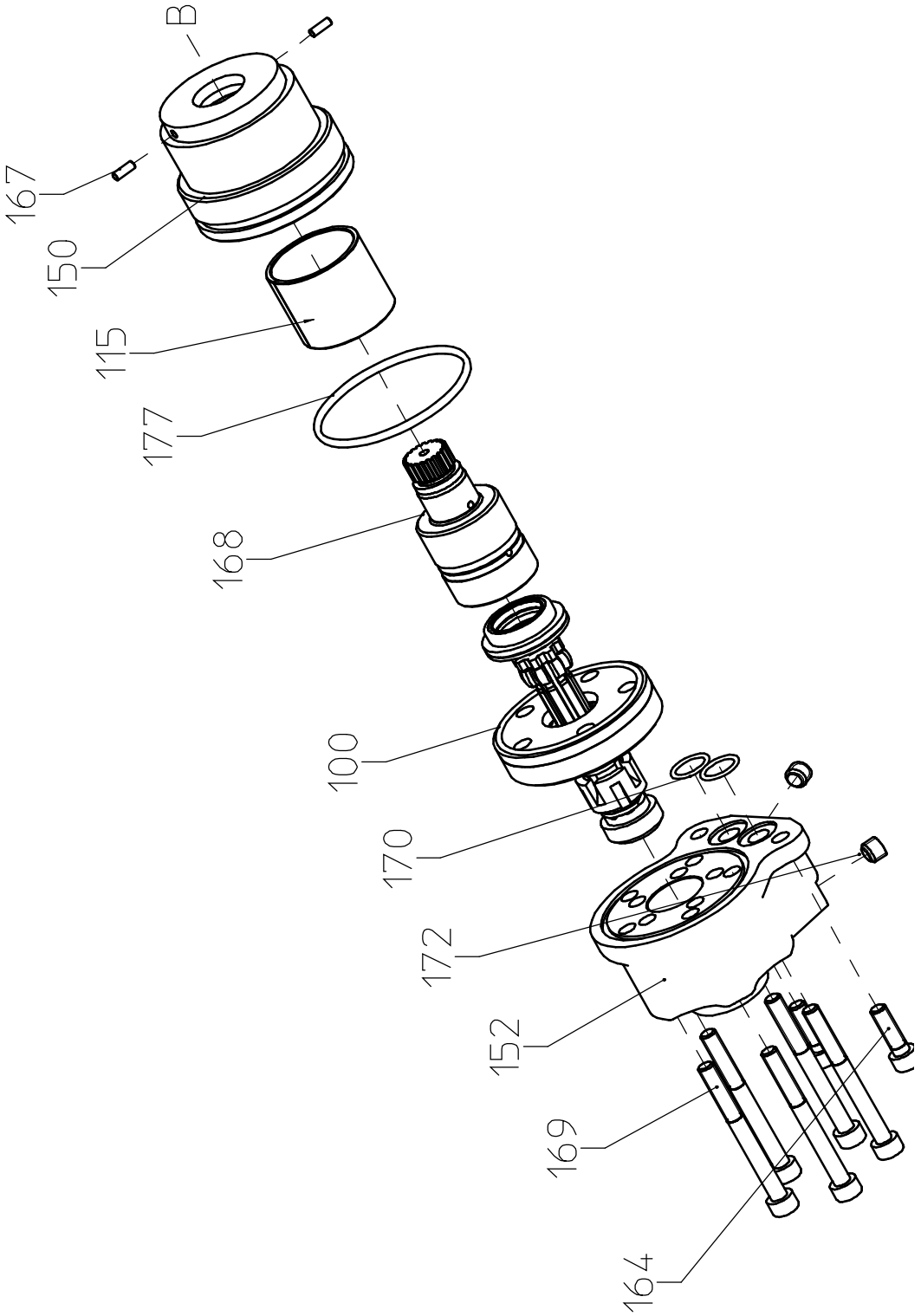

Spare Parts List

Description:	Part and drawing number:
Hydraulic Motor	**9 5501 0130**

Item	Qty.	Description	Part and drawing no.		Remarks
104	1	Shaft sealing ring	9 1925 0450	*	
106	1	Axial disc	9 1024 0360	*	
107	1	Axial thrust bearing	9 1024 0370	*	
108	1	Spacer	9 5501 0040		
109	1	Carrier	9 5501 0140		
110	1	Drive shaft	9 5501 0150		
111	3	O-ring	9 1921 1240	*	
112	1	Cover disc	9 5501 0070		
113	1	Geroler Element	9 5501 0160		
114	1	Rotary slide	9 5501 0090		
		* Wear parts to be stored in case of			
		continuous use!			

Spare Parts List

Description:	Part and drawing number:
Hydraulic Motor	**9 5501 0130**

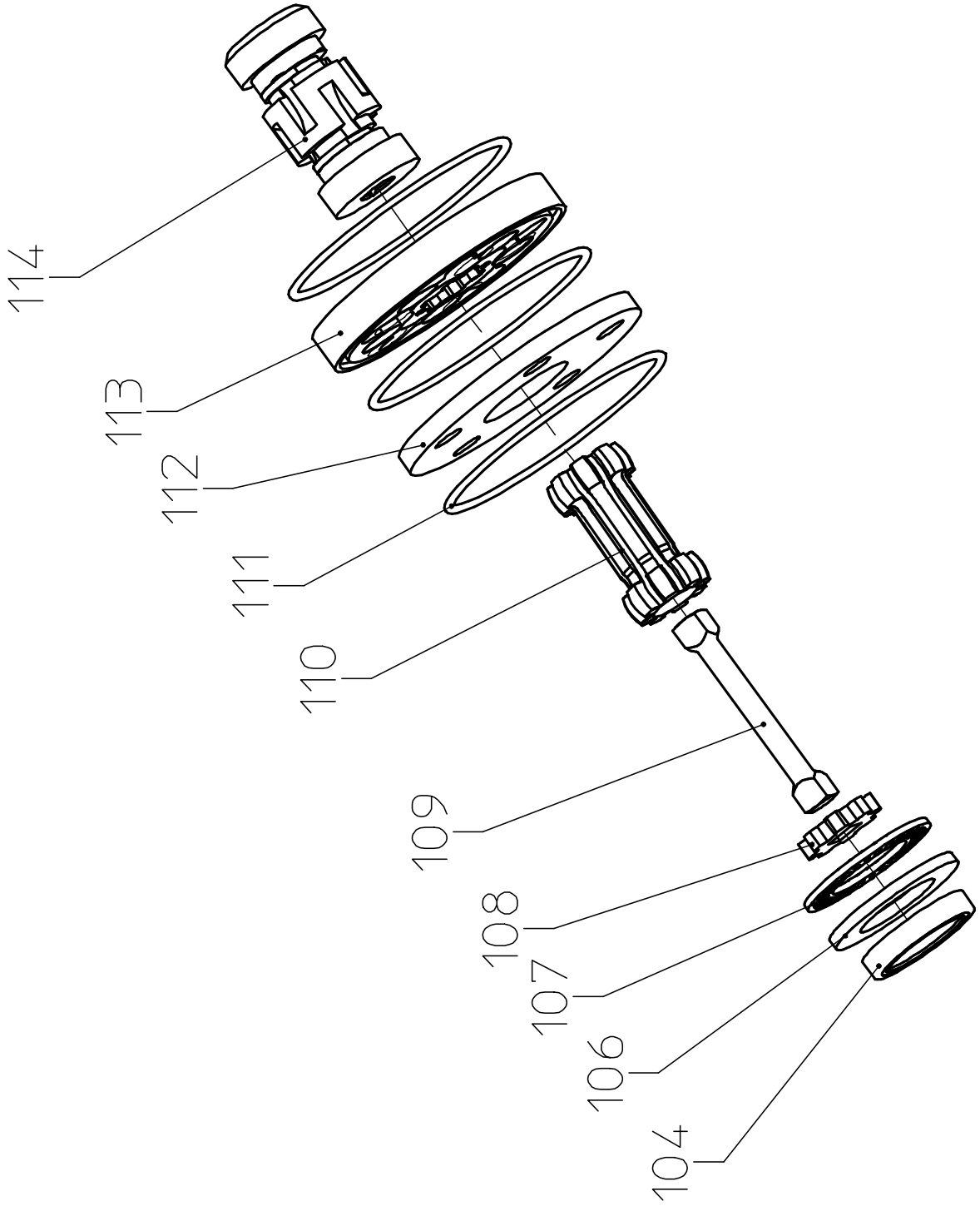

Spare Parts List	
Description: **Hydraulic Motor**	Part and drawing number: **9 5501 0130**

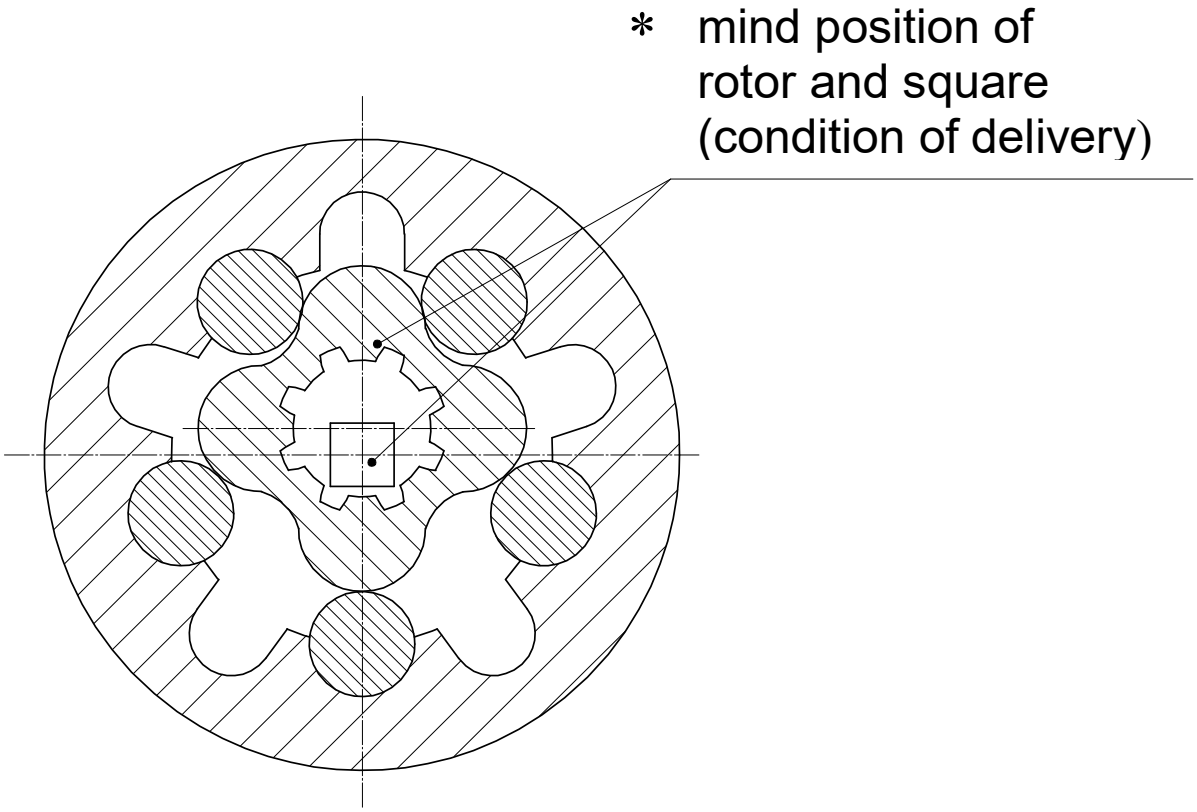

Spare Parts List

Description:	Part and drawing number:
Valve Insert, Assy.	**2 1317 3300**

Item	Qty.	Description	Part and drawing no.		Remarks
307	1	Snap ring	9 1703 0260		
308	1	Socket head screw	9 1110 2090		
309	1	Washer	9 3302 0150		
310	1	Governor piston valve	2 1317 3320		
311	1	Spring plate	2 1317 3070		
312	1	Slide	2 1317 3110		
314	1	Sleeve	2 1317 3090		
315	1	Guide	2 1317 3100		
317	1	Pressure spring	9 1803 1700		
318	1	Locking plate	9 1706 0180		
319	1	O-ring	9 1901 3290	*	
320	1	O-ring	9 1901 9800	*	
321	1	O-ring	9 1901 2550	*	
322	1	Threaded pin	9 1148 3030		
323	1	O-ring	9 1901 6020	*	
326	1	O-ring	9 1901 2080	*	
		* Wear parts to be stored in case of			
		continuous use!			

Spare Parts List

Description:	Part and drawing number:
Valve Insert, Assy.	**2 1317 3300**

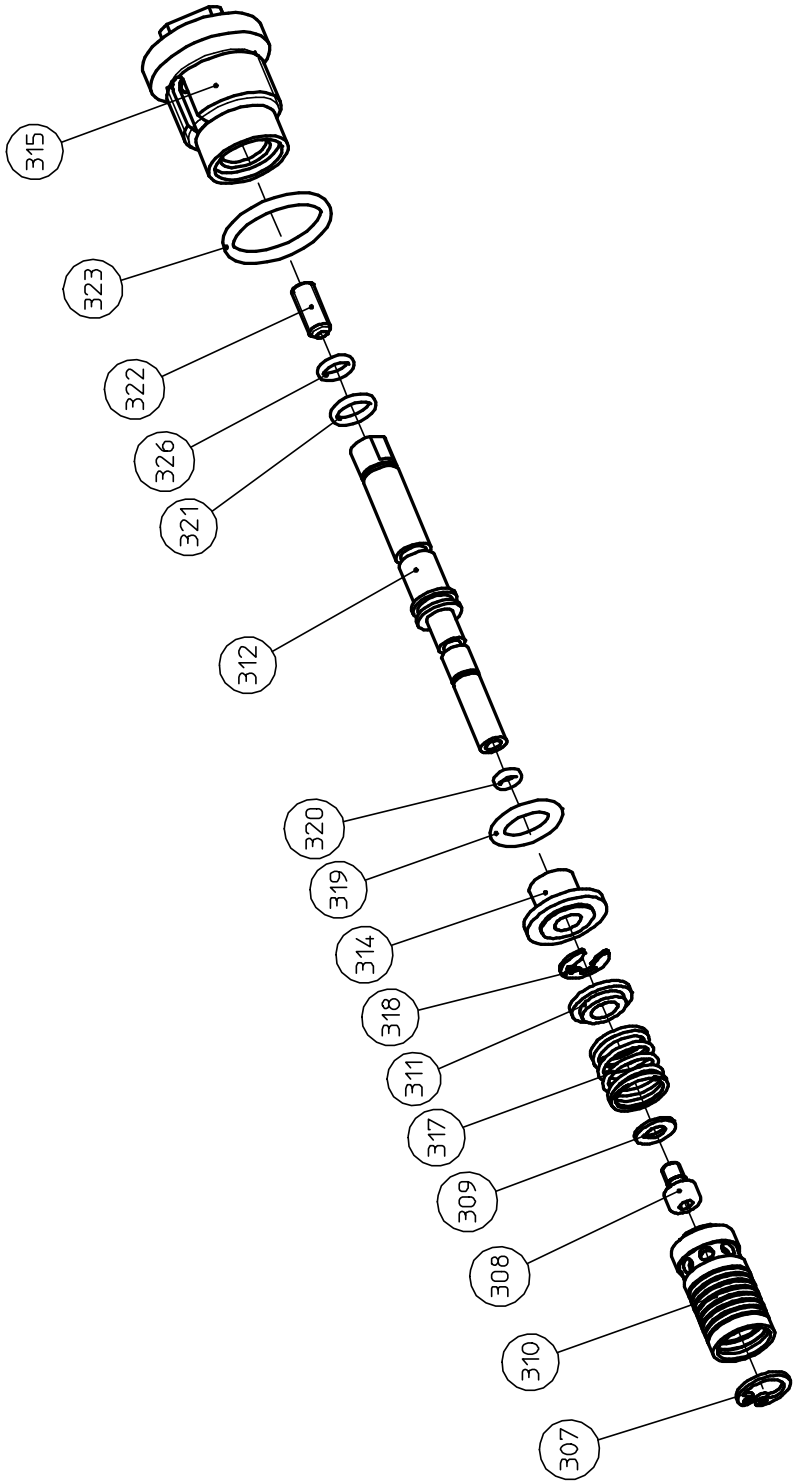

Spare Parts List

Description:	Part and drawing number:
Handle, Assy.	**2 2406 7000**

Item	Qty.	Description	Part and drawing no.		Remarks
601	1	Handle, assy.	2 2406 7010		
602	1	Valve trigger	2 2406 7020		
603	1	Double notched taper pin	9 1641 0010		
604	2	Threaded pin	9 1148 3030		

Spare Parts List

Description:	Part and drawing number:
Handle, Assy.	**2 2406 7000**

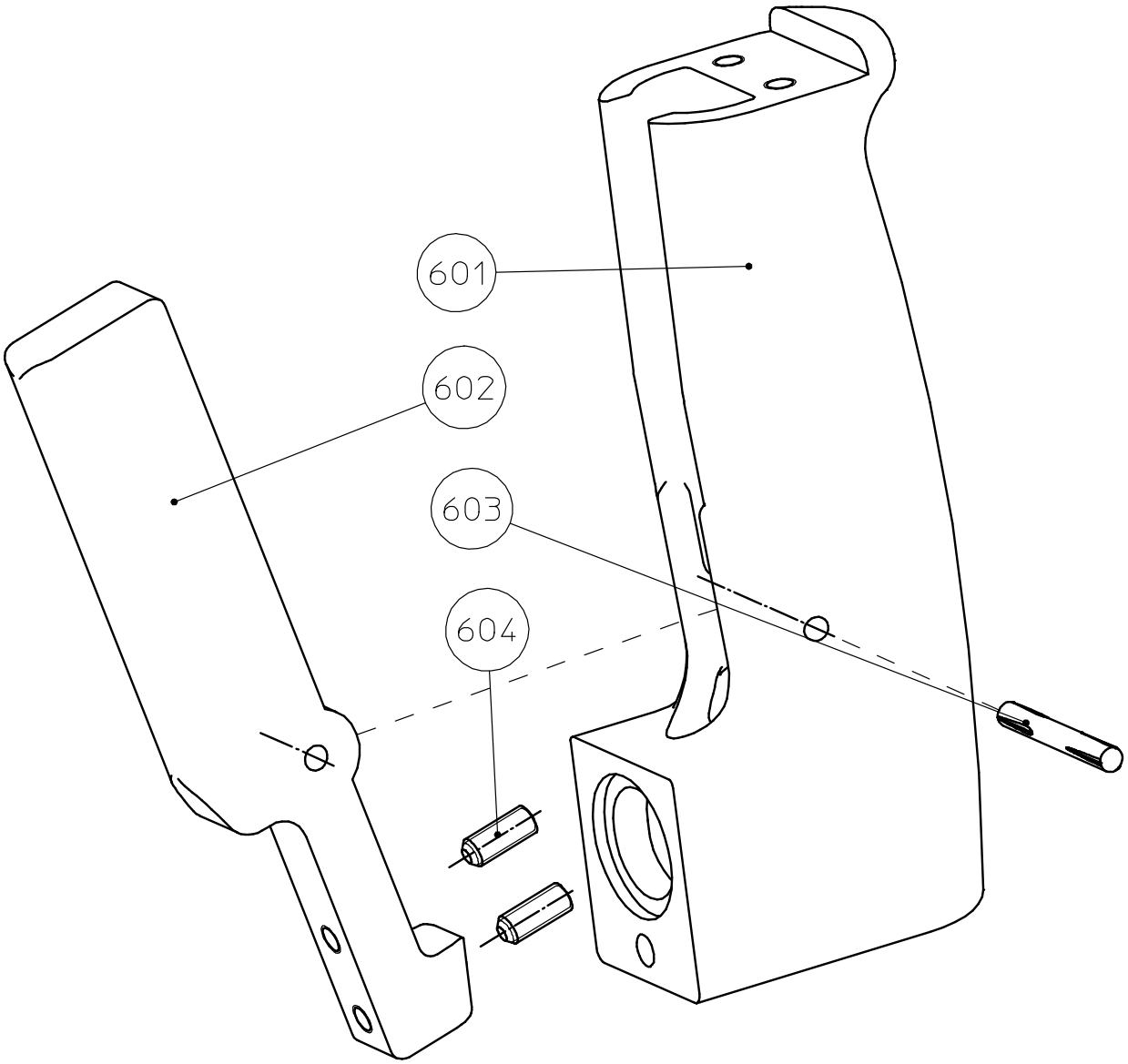

Spare Parts List

Description:	Part and drawing number:
Gearbox	**2 2418 4000**

Item	Qty.	Description	Part and drawing no.		Remarks
101	1	Cap	2 2418 4720		
102	1	Snap ring	9 1702 0150		
103	1	Needle holder	2 2414 4470		
104	1	Pressure spring	9 1803 4750		
105	1	Shaft seal	9 1905 0530	*	
106	1	Plastic ring	2 2414 4380	*	
107	1	Ring holder	2 2414 4390		
108	1	Snap ring	9 1702 0180		
109	1	Grooved ball bearing	9 1003 0090	*	
	1	Slip clutch, assy. with bevel gear	2 2416 6920		item 110-121
	1	Bevel gear (pinion + wheel)	2 2417 4950		with item 110-111
110	1	Gear wheel	2 2417 4640		
111	1	Gear pinion	2 2414 4630		
112	1	Feather key	9 1501 1220		
113	1	Grooved ball bearing	9 1004 0160	*	
114	1	Washer	2 2414 4880		
115	1	Washer	2 2414 4670		
116	1	Support disc	2 2414 4700		
117	8	Pressure spring	9 1803 4780		
118	8	Cylinder roller	9 1016 0490		
119	1	Gear pinion	2 2414 4240		
120	1	Cover disc	2 2414 4770		
121	1	Grooved ball bearing	9 1001 0390	*	
122	2	Feather key	9 1501 3570		
123	4	Socket head screw	9 1110 3080		
124	1	Gearbox housing cover	2 2416 4090		
125	2	O-ring	9 1901 3480	*	
126	1	Gearbox housing, assy.	2 2416 4910		
127	2	Socket head screw	9 1110 3120		
128	1	Snap ring	9 1702 0050		
129	1	Crankshaft	2 2414 4550		
130	1	Grooved ball bearing	9 1004 0380	*	
131	1	Snap ring	9 1702 0140		

Spare Parts List

Description:	Part and drawing number:
Gearbox	**2 2418 4000**

Item	Qty.	Description	Part and drawing no.		Remarks
132	1	Bearing cover	2 2414 4160		
133	1	Spur gear	2 2414 4340		
134	1	Spur gear	2 2414 4440		
135	1	Spacer ring	2 2414 4280		
136	1	Snap ring	9 1702 0100		
137	6	Needle roller	2 2414 4680		
138	1	Output housing	2 2418 4510		
139	4	Socket head screw	9 1110 4350		
140	1	Needle cage	9 1015 1220	*	
141	1	Disc	2 2414 4370		
142	1	O-ring	9 1901 3190	*	
143	1	Needle sleeve	9 1014 0480		
144	4	Cylinder roller	9 1016 0490		
145	2	Feather key	9 1507 9130		
146	1	Cylinder	2 2416 4600		
147	1	Sleeve	2 2414 4490		
148	1	Pressure spring	9 1803 4760		
149	1	Impact piston	2 2414 4620		
150	2	O-ring	9 1921 3590	*	
151	1	Coupling	2 2418 4610		
152	1	Piston	2 2414 4520		
153	1	Connecting rod, assy.	2 2414 4530		with item 154
154	1	Needle bearing	9 1013 0290	*	
155	1	Gudgeon pin	2 2414 4560		
156	1	Second handle, assy.	2 2415 6910		
160	1	Handle holder, assy.	2 2414 6950		
161	1	Handle bolt	2 2414 6920		
162	1	Depth stop	2 2414 9100		
163	1	Holder sleeve	2 2418 4300		
164	1	Centring bushing	2 2417 4370		
165	2	O-ring	9 1901 4330	*	

Spare Parts List

Description:	Part and drawing number:
Gearbox	**2 2418 4000**

Item	Qty.	Description	Part and drawing no.		Remarks
166	1	O-ring	9 1901 5610	*	
167	2	Feather key	9 1501 3340		
168	3	Shaft sealing ring	9 1905 1630	*	
169	2	Snap ring	9 1703 0110		
170	1	Cover	2 2418 4190		
171	1	O-ring	9 1901 3190	*	
172	4	Socket head screw	9 1112 5180		
173	1	Output shaft	2 2417 4730		
174	1	Tool holder	2 2418 4740		
175	1	Guide tube	2 2418 4700		
176	1	Shifter sleeve	2 2417 8950		
177	1	Twist / Pressure spring	9 1807 0240		
		* Wear parts to be stored in case of			
		continuous use!			

Spare Parts List

Description:	Part and drawing number:
Gearbox	**2 2418 4000**

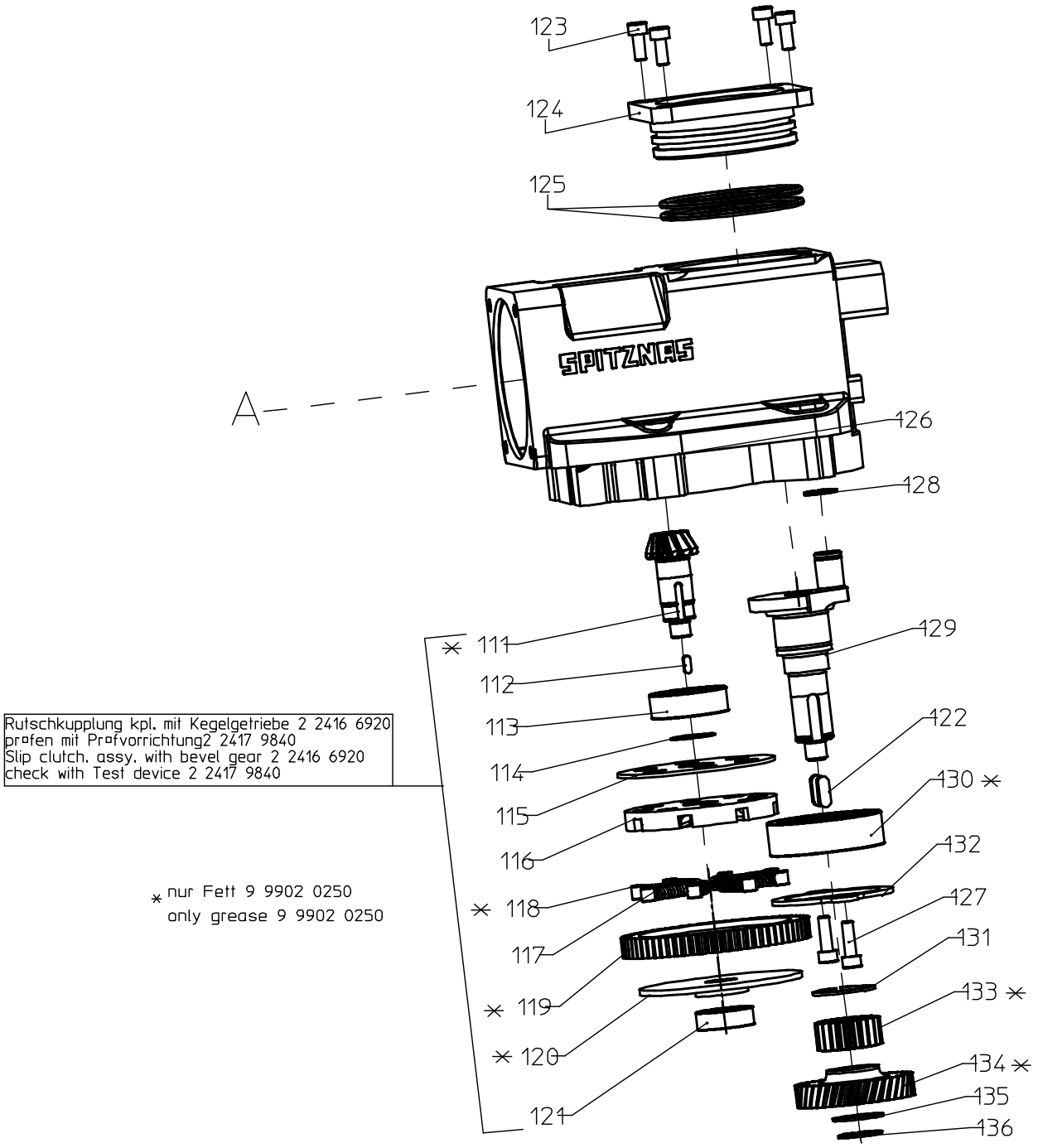

Spare Parts List

Description:	Part and drawing number:
Gearbox	**2 2418 4000**

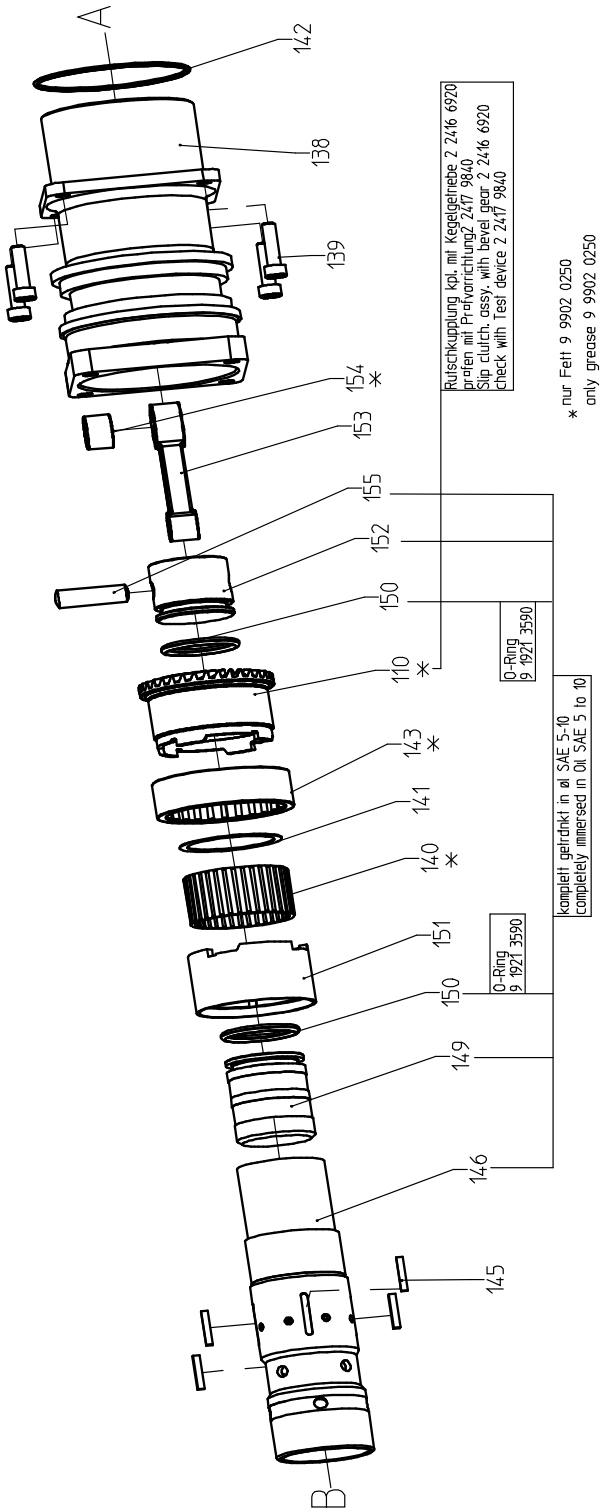

Spare Parts List

Description:	Part and drawing number:
Gearbox	**2 2418 4000**

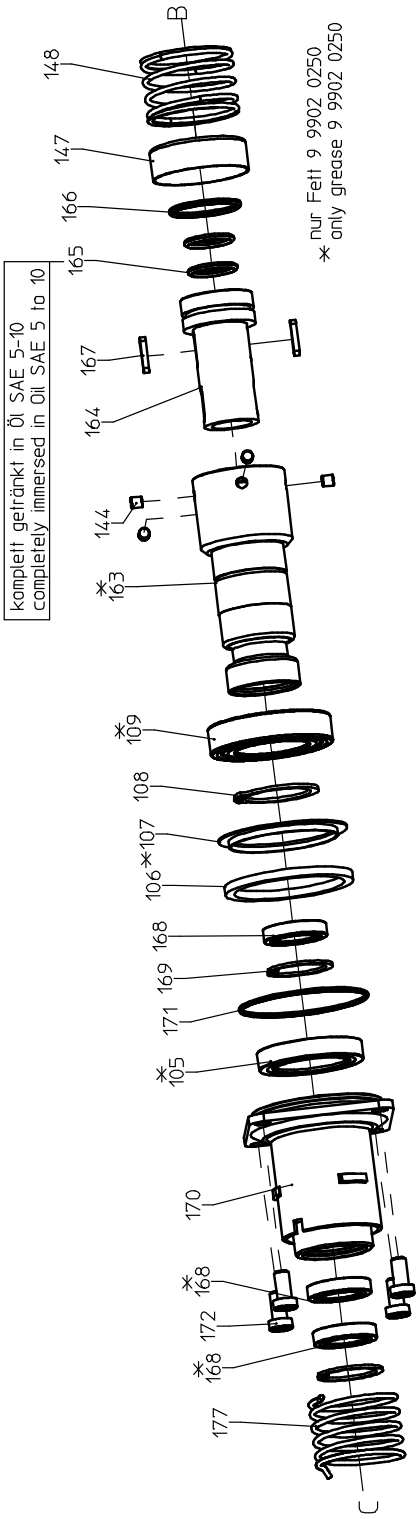

Spare Parts List

Description:	Part and drawing number:
Gearbox	**2 2418 4000**

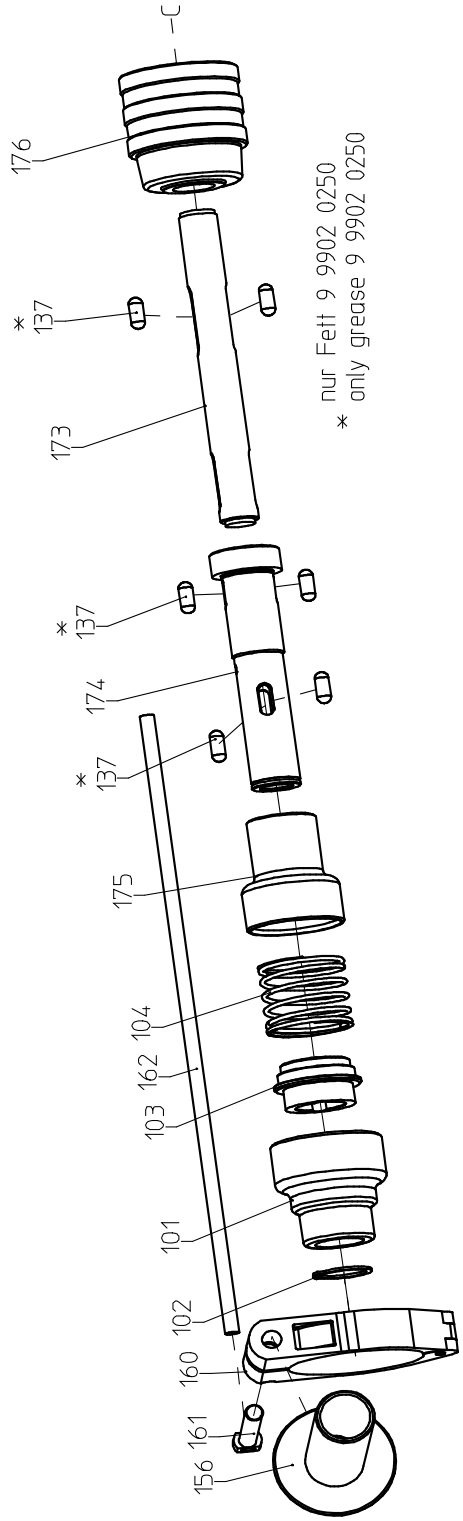

CS Unitec, Inc.
22 Harbor Ave, Norwalk, CT 06850 USA

Toll-free: 1-800-700-5919 (USA & Canada)
Phone: 203-853-9522
(outside USA & Canada) Fax: 203-853-9921
E-Mail: info@csunitec.com Internet: www.csunitec.com