UNITEC

Hydraulic Chain Saw

Type 5 1030 0010

ATEX and Underwater Tool

II 2G Ex h IIB T5 Gb

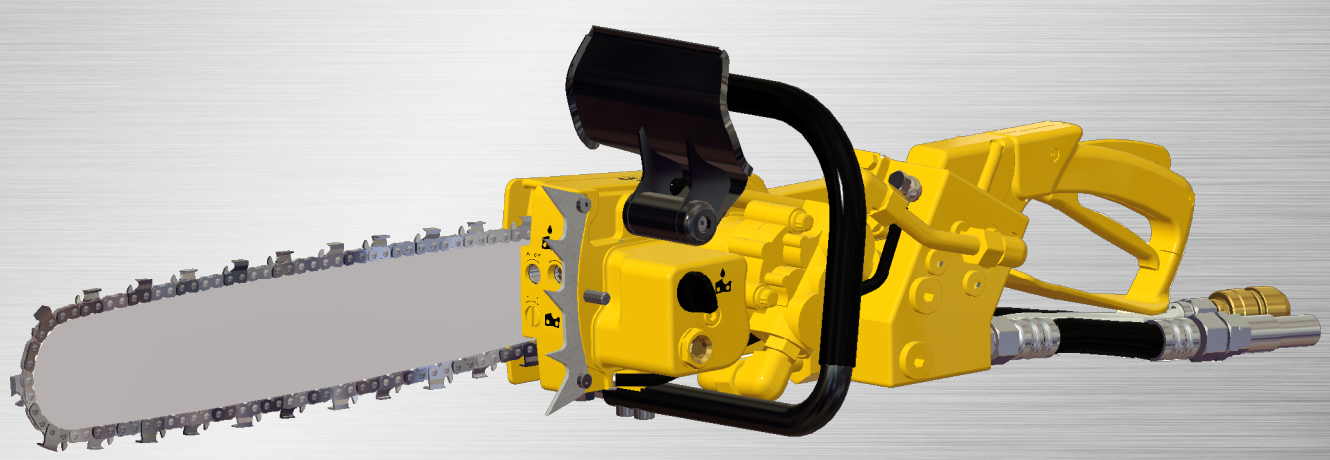

Illustration can differ from the original

Repair Manual and Spare Parts List

Translation of the original repair instruction,
compiled: 17.11.20

Techn. Doc. No. 564

REPAIR

Disassembly

- Before disassembling, separate the machine from the hydraulic supply.
- Push the brake lever item 22 forward.
- Loosen the hexagonal nuts item 32 (2 pieces) and remove the cover item 28 (page 6).
- Remove the saw chain bar and the saw chain.
- Loosen the socket head screw item 38 (2 pieces) and pull off the spiked strip item 27 (page 6).
- Remove the snap ring item 34 (page 6).
- Take the stop discs item 24 and 39 with the sprocket item 23 (page 6) from the drive shaft item 2 (page 13)
- Unscrew the countersunk screws item 30 (5 pieces), take off the cover item 25.
- Pull the brake disc item 25 and the feather key item 68 from the drive shaft item 2 (page 9)
- Open the tank cap, assy. item 61 and rinse the oil and dispose it of properly (page 9).
- Loosen the socket head screw item 56 and remove the oil container item 6 and the O-ring item 77 (page 9).
- Unscrew the items straight screw-in screwing item 84, the angle screw-in fitting item 85 (2 pieces) and the angle screw-in fitting item 86 (page 9).
- Trap the oil and dispose it of properly.
- Loosen the socket head screws item 29 (2 pieces) and the socket head screw item 38 and remove the second handle item 19 (page 6).
- Remove the socket head screws item 54 (4 pieces) with the item 48 (page 9).
- Take off the drive motor item 1.
- Remove the socket head screw item 58. Pull the brake lever item 22 (in released position) (page 6) and the feather key item 33 from the rocker switch, assy. item 7 (page 10).
- Loosen the socket head screw item 53 (2 pieces) and take off the protective cap item 36 (page 10).
- Remove the socket head screws item 57 (2 pieces) and the socket head screws item 58 (2 pieces) and pull off the handle, assy. item 4 (page 10).

1-800-700-5919 (US/CA)
WWW.CSUNITEC.COM
info@csunitec.com
+1-203-853-9522 (Intl.)

- Remove hexagonal screws item 50 (5 pieces) and take away the control valve item 3 (page10).
- Dismount the brake band item 26 by unscrewing the socket head screw item 52 (glued-in) (page 10).
- Remove the socket head screw item 57 (2 pieces) and pull off the holder item 29 (page 10).
- Take off the tension spring item 75 (page 10).
- Remove the snap ring item 73 (page 10).
- Loosen the thread bolt item 28 (glued-in) (page 10).
- Replace the bearing bolt item 27 (glued-in) and the compensator item 34 (page 10).
- Dismount the connection joint item 24 (page 10)
- Loosen the socket head screw item 51 (2 pieces) and remove the holder item 12 with items 13, 65 and 66 from the base plate, assy. item 2 (page 10).
- Continue disassembling, if necessary.

Hydraulic circuit diagram

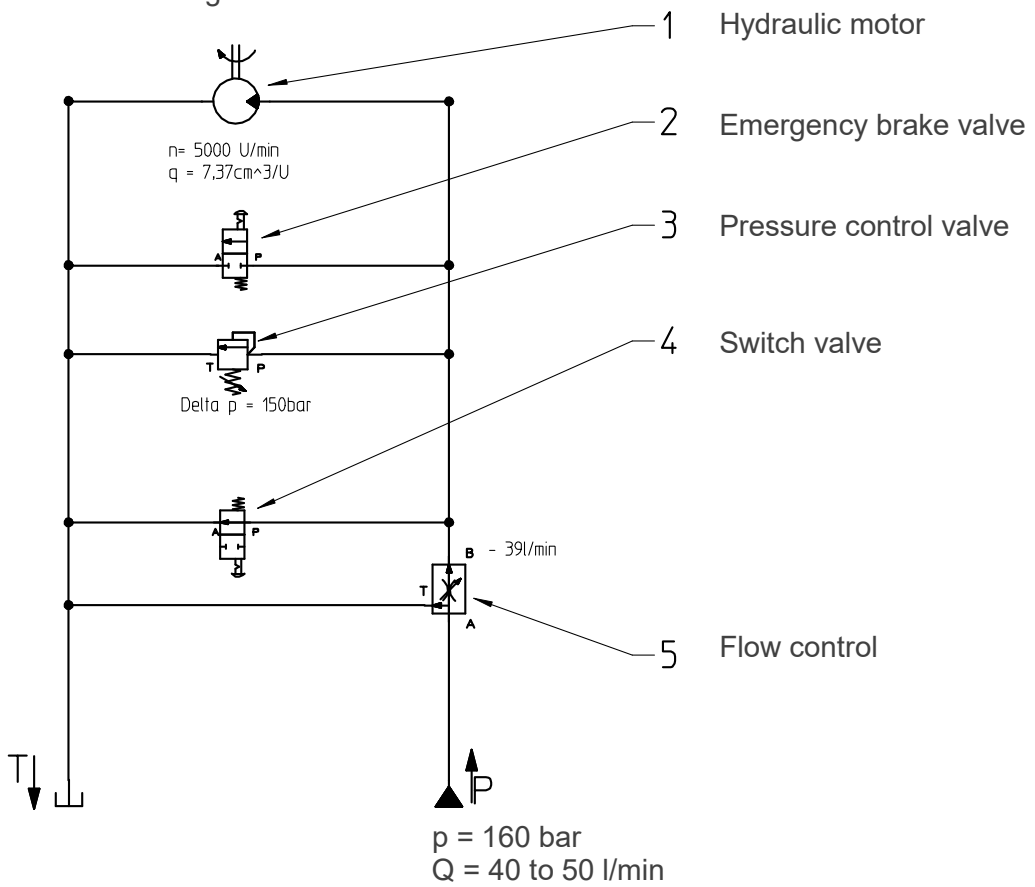

1-800-700-5919 (US/CA)
WWW.CSUNITEC.COM
info@csunitec.com
+1-203-853-9522 (Intl.)

Assembly
The assembly is done in the reverse order.

The following has to be checked after the assembly:

a) **Speed at 140 - 200 bar flow pressure and 40 - 50 l/min volume flow**
(without chain bar and chain)

- 5000 1/min free speed ± 5%

b) **The release force of the brake lever** (at standstill)

F = 20- 60 N / 2- 6 kg below 45°

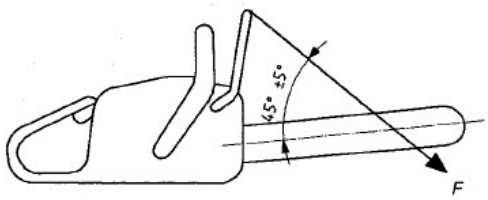

c) **Switch- off of the motor after brake release (brake lever) when control device is actuated**
- The motor must not turn, when the brake lever item 22 is released and the switch lever item 603 is actuated.

d) **Leakages**
- There must not leak any oil, except from the outlet of the chain lubricating device.

e) **Initial position of the control device**
- After release, the control device (valve lever item 603) must change into the initial position, without actuation by hand

f) **Functioning of the braking process**
- Start saw (wait for final start- up speed of the chain)
- Release brake (immediate stop of the chain)
- Release the valve lever (Switch the saw off)
- Pull the brake lever towards you (release of the brake)

Spare Parts
Only genuine Spitznas spare parts may be used.
There is no warranty for damages and liability is disclaimed, if non-original spare parts and accessories are used.

1-800-700-5919 (US/CA)
WWW.CSUNITEC.COM
info@csunitec.com
+1-203-853-9522 (Intl.)

Spare Parts List

Description:	Part and drawing number:
Hydraulic **Chain Saw**	**5 1030 0010**

Item	Qty	Description	Part and drawing no.		Remarks
		5 1030 0010 consisting of:			
1	1	Hydraulic chain saw basic type	5 1030 0100		see extra list
2	1	Hydraulic hose set	5 1030 9200		see extra list
3	1	Water hose, assy.	5 1030 3870		see extra list
4	1	Sign	9 3104 0340	*	
5	1	Wrench 16/19	9 1316 0330		
6	1	Indicating label	5 1026 0340	*	
7	1	Indicating label	5 1026 0341	*	
8	1	Indicating label	5 1026 0342	*	
9	1	Indicating label	5 1026 0343	*	
10	1	Type label	9 3101 0640	*	
11	1	Warning sign	9 3102 0300	*	
13	1	Spitznas logo	9 3107 0080	*	
14	2	Warning sign	9 3102 0320	*	
15	1	Indicating label	5 1030 0343	*	
16	1	Indicating label	5 1030 0345	*	
17	4	Round head grooved pin	9 1628 0040	*	
19	1	Second handle	5 1030 6500		
20	2	Ring hose nipple	5 1030 5100		
21	1	Handle holder	5 1026 2110		
22	1	Brake lever	5 1026 6800		
23	1	Sprocket	5 1026 7070	*	
24	1	Guard plate	5 1026 7080	*	
25	1	Cover	5 1026 7640		
26	1	Chain catcher	5 1030 6510		
27	1	Spiked strip	5 1030 7160		
28	1	Cover	5 1030 7710		
29	2	Socket head screw	9 1110 5450		
30	5	Counter sunk screw	9 1113 2050		
31	2	Hollow screw	9 1126 0020		
32	2	Hexagonal nut	9 1234 0030		

1-800-700-5919 (US/CA)
WWW.CSUNITEC.COM
info@csunitec.com
+1-203-853-9522 (Intl.)

Spare Parts List

Description:	Part and drawing number:
Hydraulic Chain Saw	5 1030 0010

Item	Qty	Description	Part and drawing no.		Remarks
33	1	Feather key	9 1501 2100		
34	1	Snap ring	9 1702 0110		
35	4	Gasket	9 1909 0030	*	
36	2	1-ear hose clamp	9 2104 0300	*	
37	1	Hose	5 1030 3890	*	
38	4	Socket head screw	9 1112 4180		
39	1	Stop disc	5 1030 7060	*	
	1	Carrying case	9 9910 0100		
		* Wear parts to be stored in case of continuous operation.			

1-800-700-5919 (US/CA)
WWW.CSUNITEC.COM
info@csunitec.com
+1-203-853-9522 (Intl.)

Spare Parts List

Description:	Part and drawing number:
Hydraulic **Chain Saw**	**5 1030 0010**

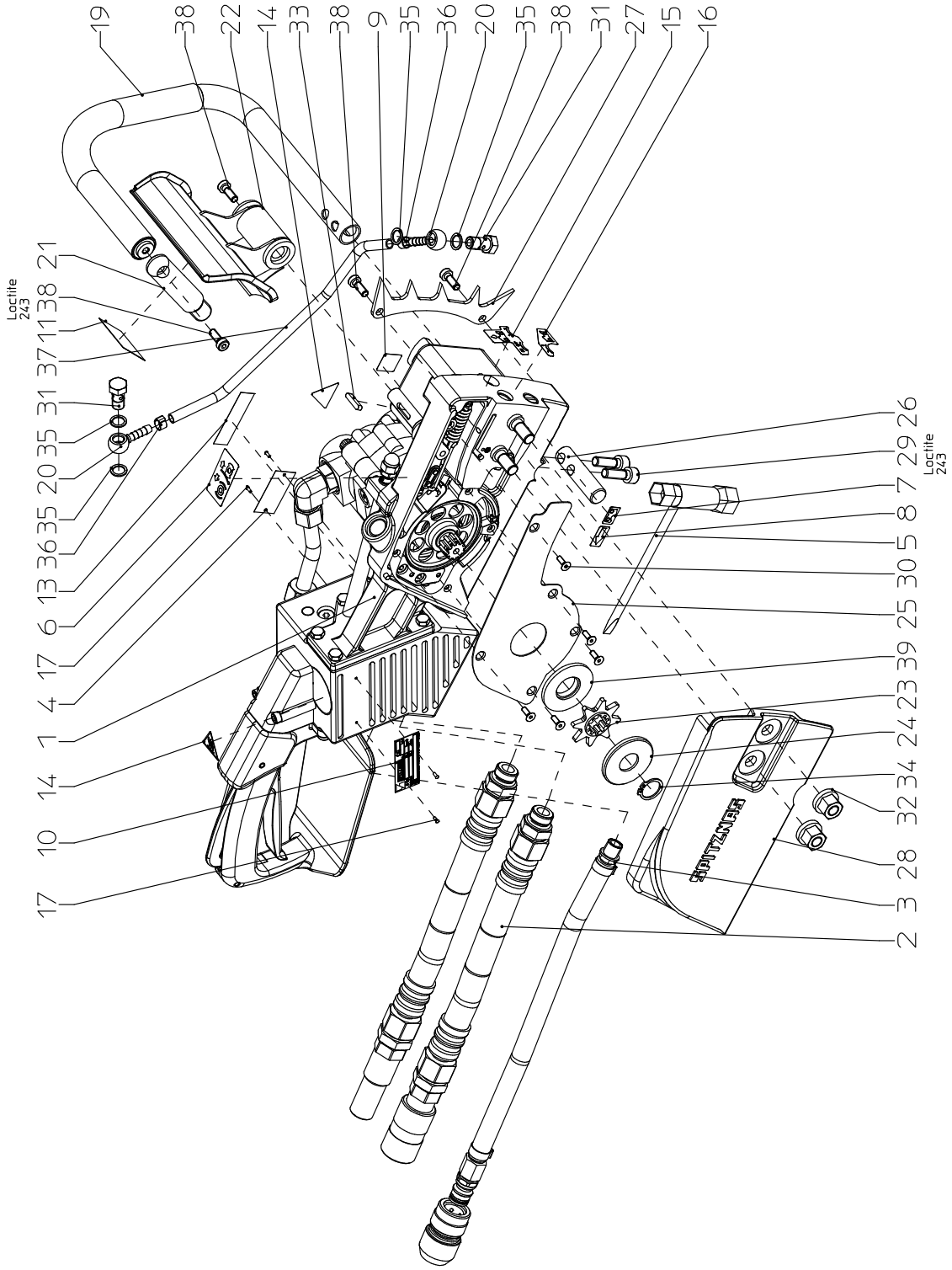

1-800-700-5919 (US/CA)
WWW.CSUNITEC.COM
info@csunitec.com
+1-203-853-9522 (Intl.)

Spare Parts List

Description:	Part and drawing number:
Hydraulic Chain Saw **basic type**	**5 1030 0100**

Item	Qty	Description	Part and drawing no.		Remarks
1	1	Drive motor	5 1030 1000		see extra list
2	1	Base plate, assy.	5 1030 1910		
3	1	Control valve	5 1030 3600		see extra list
4	1	Handle, assy.	5 1030 6000		see extra list
6	1	Oil container	5 1030 2010		
7	1	Rocker switch assy.	5 1030 2030		
8	1	Adjusting screw	5 1030 2060		
9	1	Tensioning bolt	5 1030 2090		
10	1	Oil filter, assy.	5 1030 2500	*	
11	1	Suction hose	5 1030 2540	*	
12	1	Holder	5 1030 3210		
13	1	Protective pipe	5 1030 3220		see extra list
14	1	Pressure pin	5 1030 3240		
15	1	Support	5 1030 1130		
18	1	Control bolt	5 1030 1250		
19	1	Pump housing	5 1030 3520		
20	1	Rotary piston	5 1030 3530		
21	1	Nozzle	5 1030 3570		
22	1	Hydraulic pipe 1	5 1030 3850		
23	1	Hydraulic pipe 2	5 1030 3860		
24	1	Connection joint	5 1007 9100		
25	1	Brake disc	5 1026 1220		
26	1	Brake band	5 1026 1320	*	
27	1	Bearing bolt	5 1026 2010		
28	1	Thread bolt	5 1026 2020		
29	1	Holder	5 1026 2040		
34	1	Compensator	5 1026 7100		
36	1	Protective cap	5 1030 6060		
37	1	Support 2	5 1030 6120		
42	5	Locking washer	9 1714 0040		
47	1	Threaded pin	9 1140 2030		
48	4	Locking washer	9 3329 0010		
49	1	O-ring	9 1921 4260	*	
50	5	Hexagonal screw	9 1107 4070		
		* Wear parts to be stored in case of			
		continuous operation.			

1-800-700-5919 (US/CA)
WWW.CSUNITEC.COM
info@csunitec.com
+1-203-853-9522 (Intl.)

Spare Parts List

Description:	Part and drawing number:
Hydraulic Chain Saw basic type	5 1030 0100

Item	Qty	Description	Part and drawing no.		Remarks
51	2	Socket head screw	9 1110 2100		
52	1	Socket head screw	9 1110 3010		
53	2	Socket head screw	9 1110 3040		
54	4	Socket head screw	9 1110 3380		
56	1	Socket head screw	9 1110 5090		
57	4	Socket head screw	9 1112 4150		
58	2	Socket head screw	9 1112 4180		
61	1	Tank cap, assy.	5 1030 2120	*	
62	1	Oil gauge glas	9 1185 0020		
63	1	Cup nut	9 1210 0030		
65	1	Hexagonal nut	9 1201 0130		
66	1	Cap nut	9 1208 0020		
68	1	Feather key	9 1501 3050		
69	2	Cylinder pin	9 1619 0150		
70	1	Cylinder pin	9 1619 0900		
71	2	Tension sleeve	9 1630 0060		
72	2	Cylinder pin	9 1631 0240		
73	1	Snap ring	9 1702 0010		
75	1	Tension spring	9 1804 0200		
76	2	O-ring	9 1901 2390	*	
77	1	O-ring	9 1901 4420	*	
78	1	Shaft sealing ring	9 1905 1740	*	
79	1	Sealing	9 1908 0040	*	
82	2	O-ring	9 1921 1860	*	
84	1	Straight screw-in screwing	9 2124 0520		
85	2	Angle screw-in fitting	9 2125 0130		
86	1	Angle screw-in fitting	9 2125 0140		
88	1	Spring lock washer	9 3314 0070		
89	2	Screw plug	9 3401 1090		
		* Wear parts to be stored in case of			
		continuous operation.			

1-800-700-5919 (US/CA)
WWW.CSUNITEC.COM
info@csunitec.com
+1-203-853-9522 (Intl.)

Spare Parts List

Description:	Part and drawing number:
Hydraulic **Chain Saw** **basic type**	**5 1030 0100**

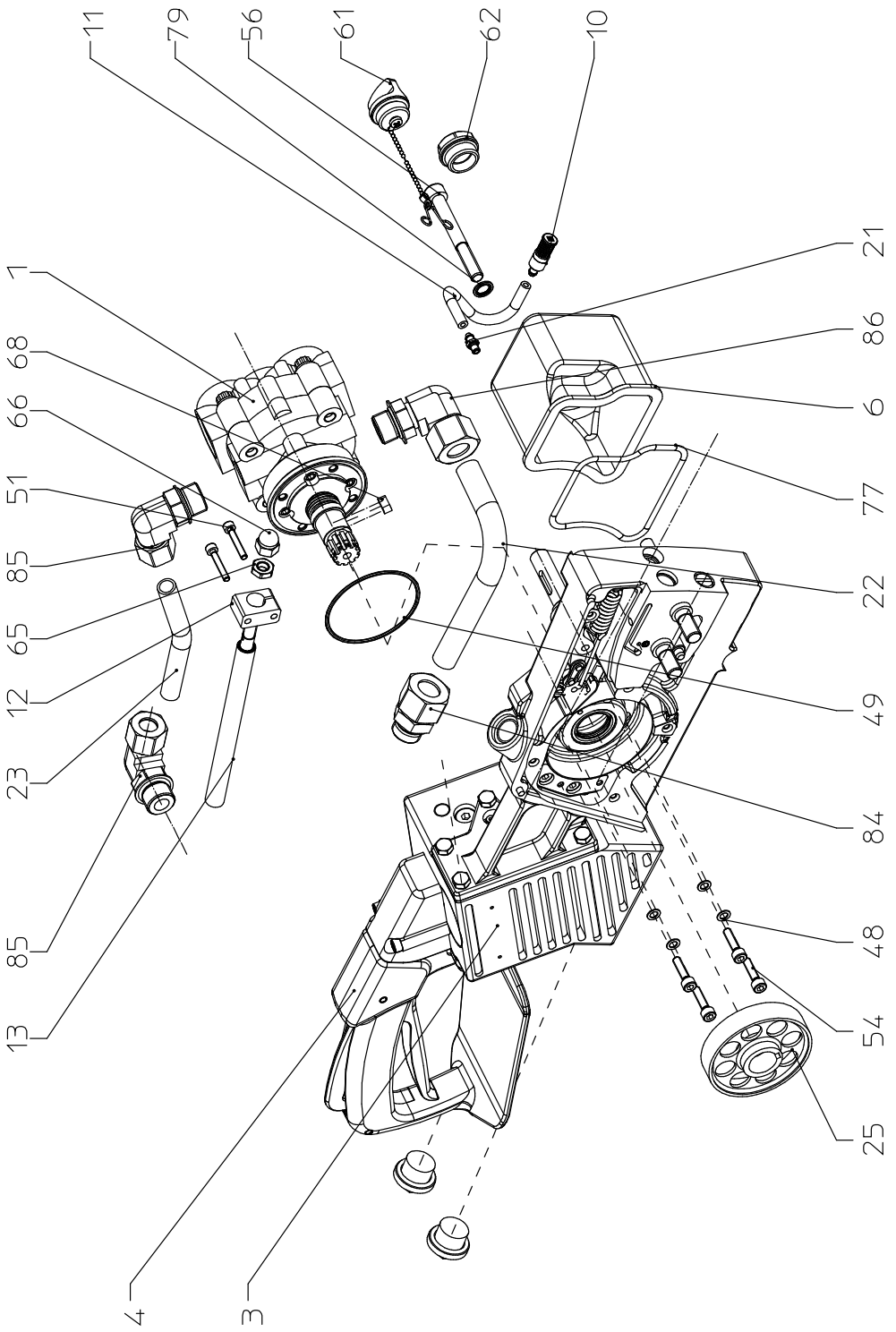

1-800-700-5919 (US/CA)
WWW.CSUNITEC.COM
info@csunitec.com
+1-203-853-9522 (Intl.)

Spare Parts List

Description:	Part and drawing number:
Hydraulic Chain Saw **basic type**	**5 1030 0100**

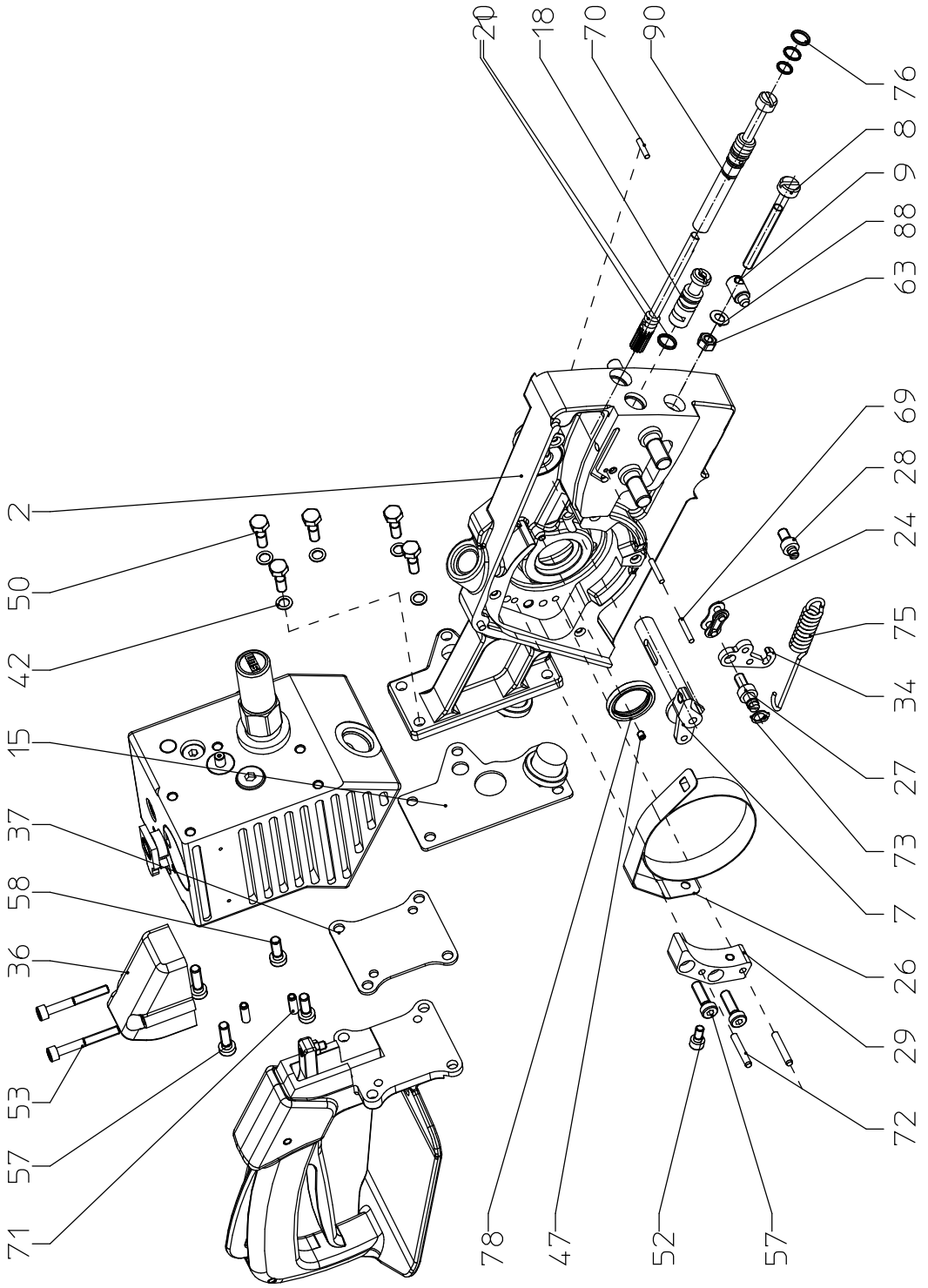

1-800-700-5919 (US/CA)
WWW.CSUNITEC.COM
info@csunitec.com
+1-203-853-9522 (Intl.)

Spare Parts List

Description:	Part and drawing number:
Drive motor	**5 1030 1000**

Item	Qty	Description	Part and drawing no.		Remarks
1	1	Gerotor-motor	9 5501 0280	*	
2	1	Output shaft	5 1030 1030		
3	1	Fixing flange	5 1030 1120		
		Sealing set for item 1	9 5501 0340	*	
		* Wear parts to be stored in case of			
		continuous operation.			

1-800-700-5919 (US/CA)
WWW.CSUNITEC.COM
info@csunitec.com
+1-203-853-9522 (Intl.)

Spare Parts List

Description:	Part and drawing number:
Drive motor	**5 1030 1000**

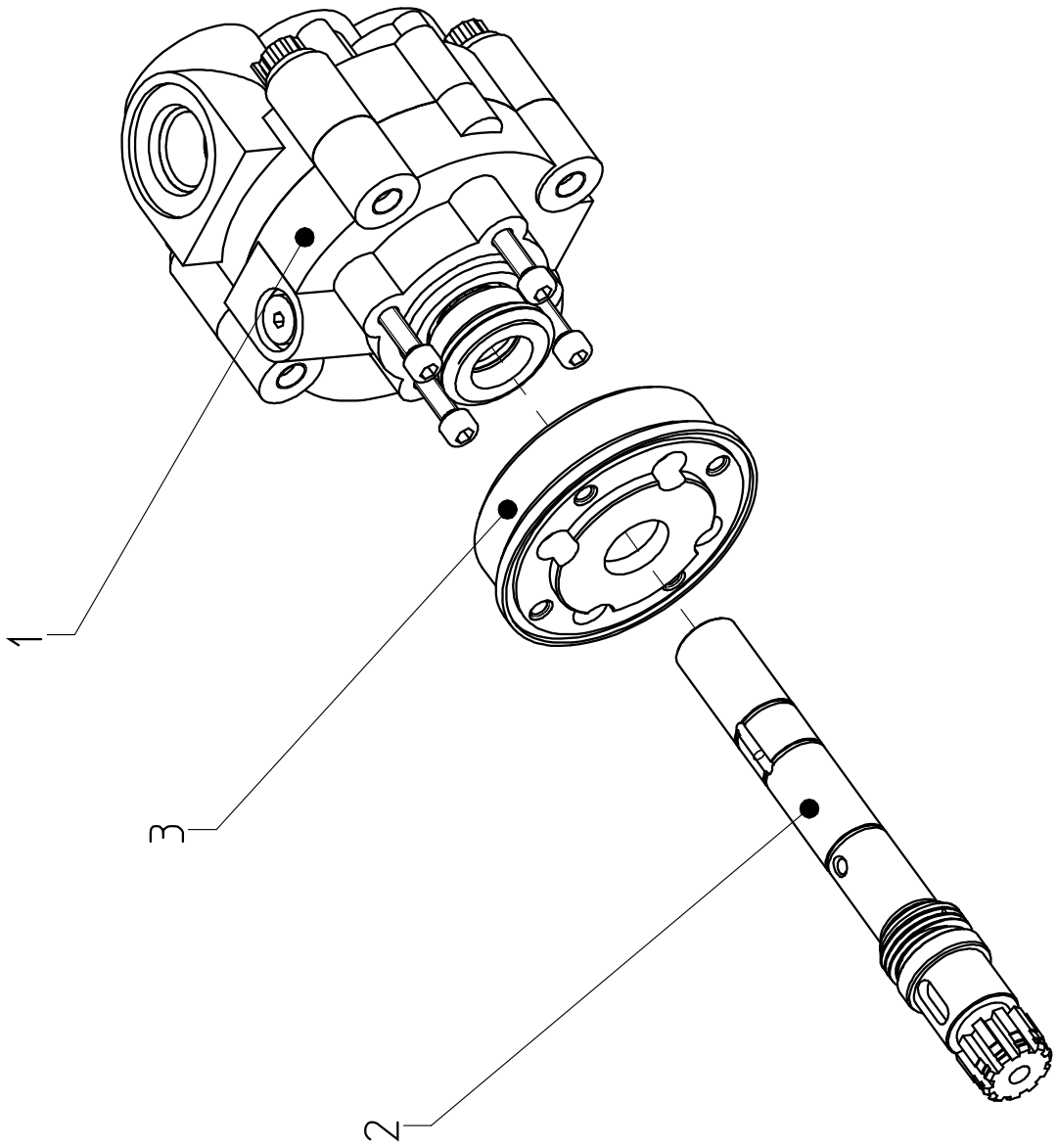

1-800-700-5919 (US/CA)
WWW.CSUNITEC.COM
info@csunitec.com
+1-203-853-9522 (Intl.)

Spare Parts List

Description:	Part and drawing number:
Control valve	**5 1030 3600**

Item	Qty	Description	Part and drawing no.		Remarks
301	1	Valve housing	5 1030 3610		
302	1	Slide	5 1030 3050		
303	1	Slide, assy.	5 1030 3660		
304	1	Pressure plate	5 1030 3070		
305	1	Bushing	5 1030 3110		
306	1	Sealing bushing	5 1030 3120	*	
307	1	Valve pin	5 1030 3130		
310	1	Protective cap	5 1030 3140		
311	1	Steel ball	9 1017 0170		
312	1	Plug with hexagon socket	5 1030 3150		
313	3	Locking screw	9 1174 0010	*	
314	4	Locking screw	9 1174 0020	*	
315	3	Locking screw	9 1174 0050	*	
316	1	Locking screw	9 1174 0110	*	
317	1	Snap ring	9 1703 0610		
318	1	Pressure spring	9 1803 5340		
319	1	Pressure spring	9 1803 0380		
320	1	Pressure spring	9 1803 5110		
321	1	O-Ring	9 1901 2620	*	
322	1	Quad-ring	9 1913 0710	*	
323	4	Quad-ring	9 1913 0720	*	
324	1	O-ring	9 1921 1270	*	
325	1	O-ring	9 1921 1880	*	
327	1	3-way valve	9 5501 0290		
328	1	Pressure control valve	9 5501 0300		
		* Wear parts to be stored in case of			
		continuous operation.			

1-800-700-5919 (US/CA)
WWW.CSUNITEC.COM
info@csunitec.com
+1-203-853-9522 (Intl.)

Spare Parts List

Description:	Part and drawing number:
Control valve	**5 1030 3600**

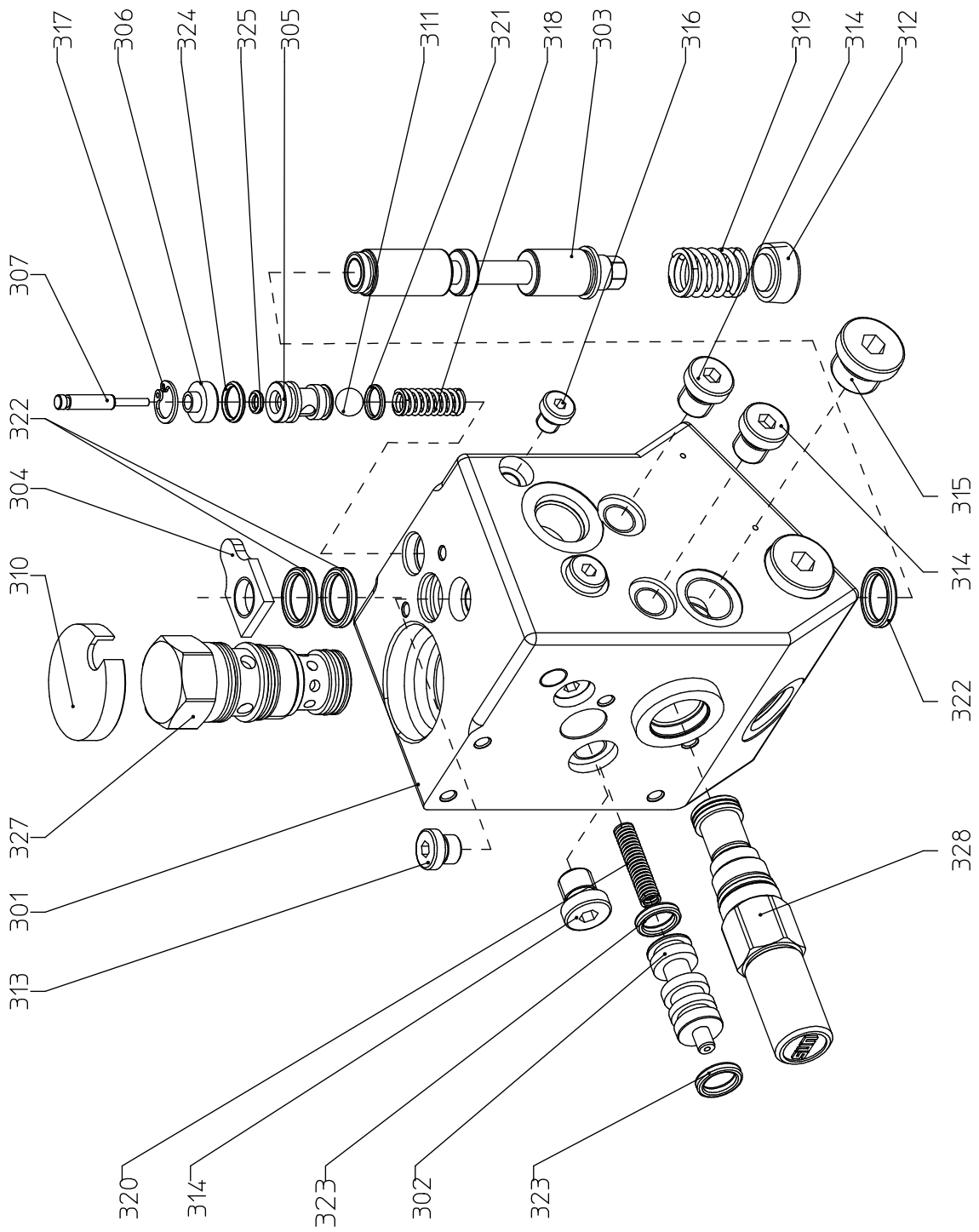

1-800-700-5919 (US/CA)
WWW.CSUNITEC.COM
info@csunitec.com
+1-203-853-9522 (Intl.)

Spare Parts List

Description:	Part and drawing number:
Protective pipe	**5 1030 3220**

Item	Qty	Description	Part and drawing no.		Remarks
1	1	Protective pipe	5 1030 3225		
2	2	DU-bushing	9 1029 0820		
3	2	O-ring	9 1921 1670	*	
4	1	Pressure pin	5 1030 3240		
		* Wear parts to be stored in case of			
		continuous operation.			

1-800-700-5919 (US/CA)
WWW.CSUNITEC.COM
info@csunitec.com
+1-203-853-9522 (Intl.)

Spare Parts List

Description:	Part and drawing number:
Protective pipe	**5 1030 3220**

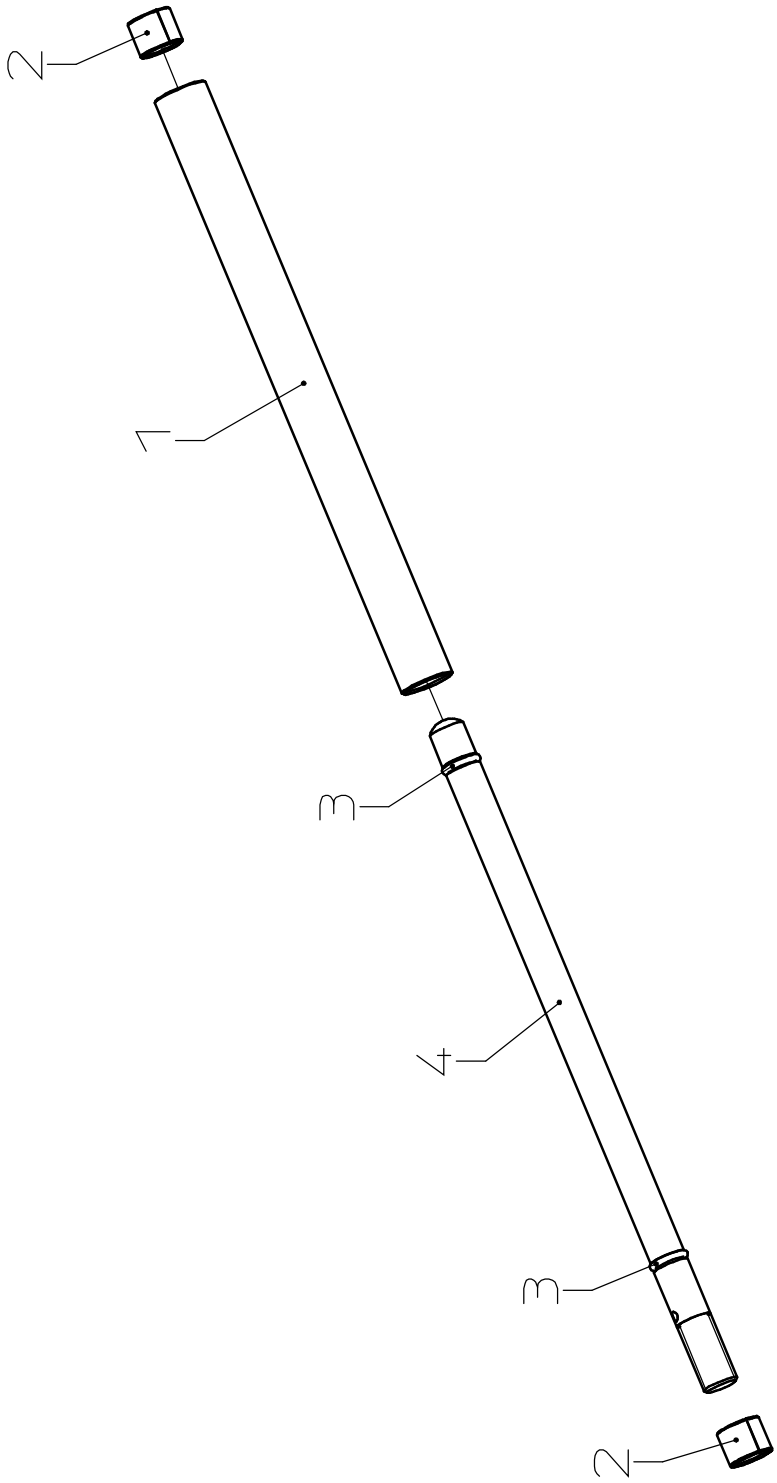

1-800-700-5919 (US/CA)
WWW.CSUNITEC.COM
info@csunitec.com
+1-203-853-9522 (Intl.)

Spare Parts List

Description:	Part and drawing number:
Water Hose, Assy.	**5 1030 3870**

Item	Qty	Description	Part and drawing no.		Remarks
44	1	Hose nozzle	9 2109 0410		
45	1	Plastic hose	5 1030 3880		
46	2	1 ear contionuous hose clamp	9 2104 0010		
47	1	Hose nozzle	9 2109 0020		
48	1	Connection	9 2050 0150		
49	1	Hose coupling with tensioning screw	9 2113 0520		
50	1	Sealing	9 2126 0120	*	
		* Wear parts to be stored in case of			
		continuous operation.			

1-800-700-5919 (US/CA)
WWW.CSUNITEC.COM
info@csunitec.com
+1-203-853-9522 (Intl.)

Spare Parts List

Description:	Part and drawing number:
Water Hose, Assy.	**5 1030 3870**

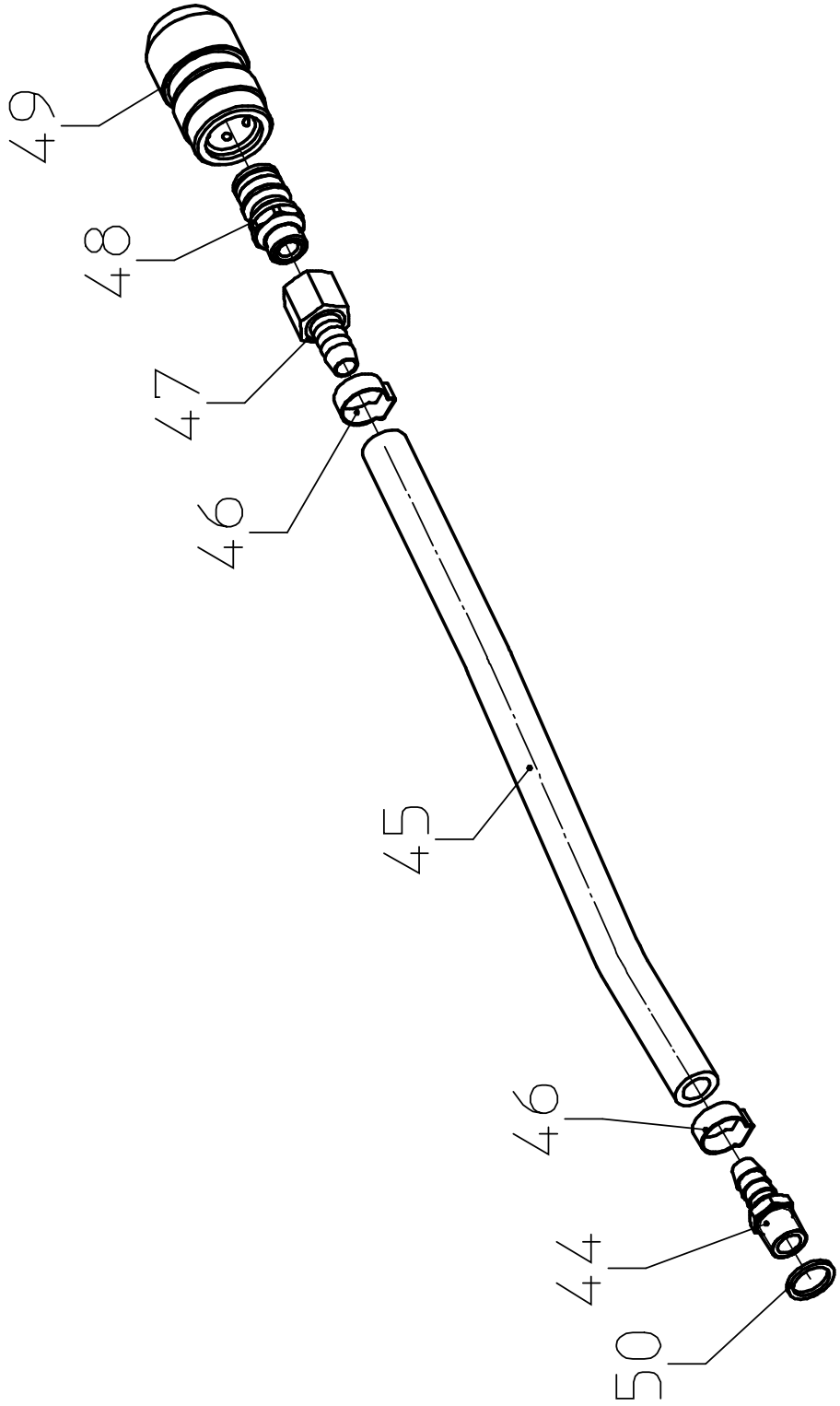

1-800-700-5919 (US/CA)
WWW.CSUNITEC.COM
info@csunitec.com
+1-203-853-9522 (Intl.)

Spare Parts List

Description:	Part and drawing number:
Handle, assy.	**5 1030 6000**

Item	Qty	Description	Part and drawing no.		Remarks
601	1	Handle	5 1030 6910		with items 605, 606, 609 and 610
603	1	Switch lever	5 1030 6030		
604	1	Locking lever	5 1030 6040		
605	1	Socket head screw	9 1112 3070		
606	1	Socket head screw	9 1112 3040		
607	1	Threaded pin	9 1140 3060		
608	1	Hexagonal nut	9 1201 0200		
609	1	Cylinder pin	9 1619 1680		
610	1	Cylinder pin	9 1631 0490		
611	1	Leg spring	9 1807 0340		

1-800-700-5919 (US/CA)
WWW.CSUNITEC.COM
info@csunitec.com
+1-203-853-9522 (Intl.)

Spare Parts List

Description:	Part and drawing number:
Handle, assy.	**5 1030 6000**

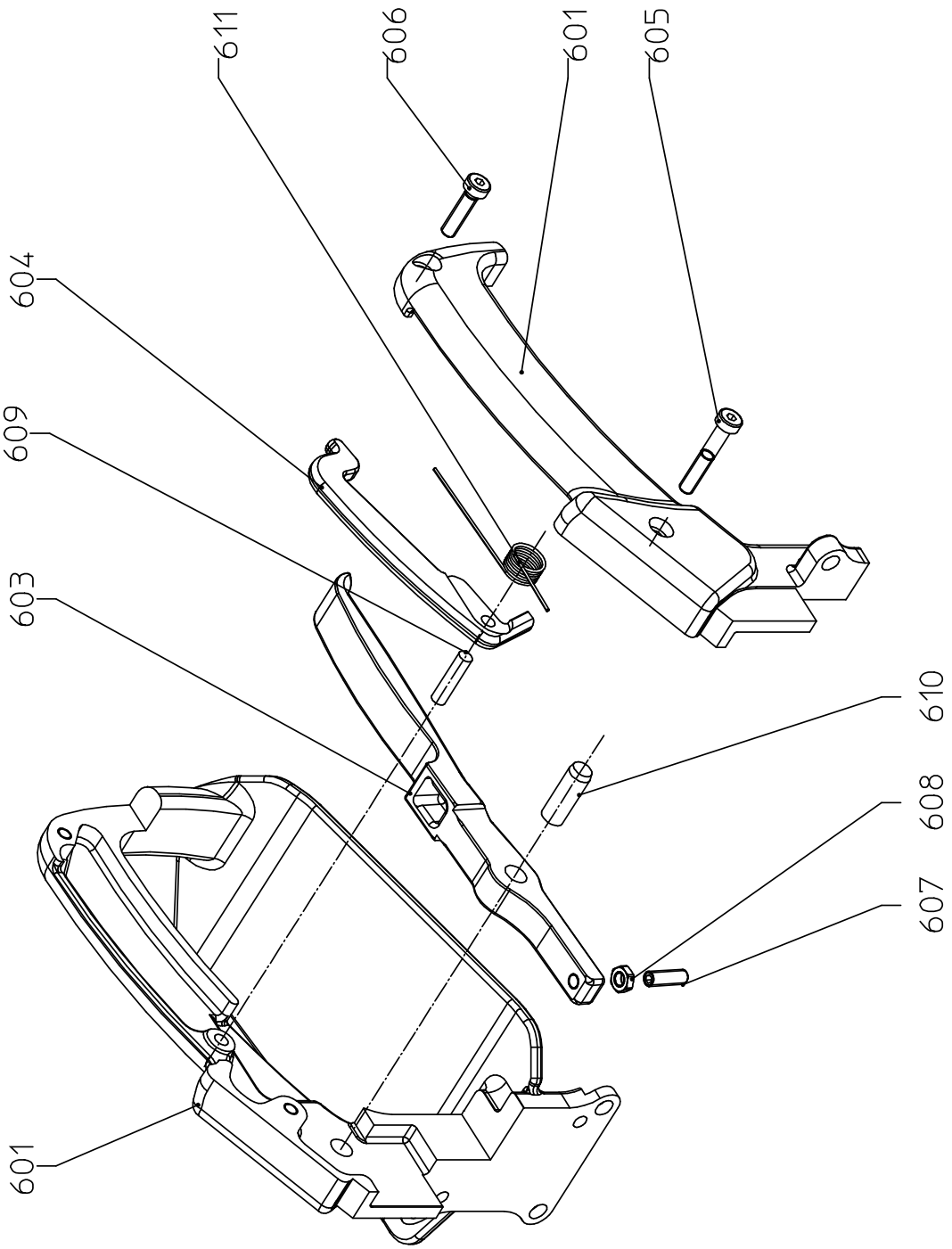

1-800-700-5919 (US/CA)
WWW.CSUNITEC.COM
info@csunitec.com
+1-203-853-9522 (Intl.)

Spare Parts List

Description:	Part and drawing number:
Hydraulic Hose Set	**5 1030 9200**

Item	Qty	Description	Part and drawing no.		Remarks
	2	Hydraulic hose	9 3601 0360		
	2	Straight screw-in screwing	9 2124 0530		
	2	Straight screw-in screwing	9 2124 0180		
	1	Flat Star A250 plug-in coupling	9 2113 0400		
	1	Flat Star A250 plug-in coupling	9 2113 0410		

1-800-700-5919 (US/CA)
WWW.CSUNITEC.COM
info@csunitec.com
+1-203-853-9522 (Intl.)

Spare Parts List

Description:	Part and drawing number:
Hydraulic Hose Set	**5 1030 9200**

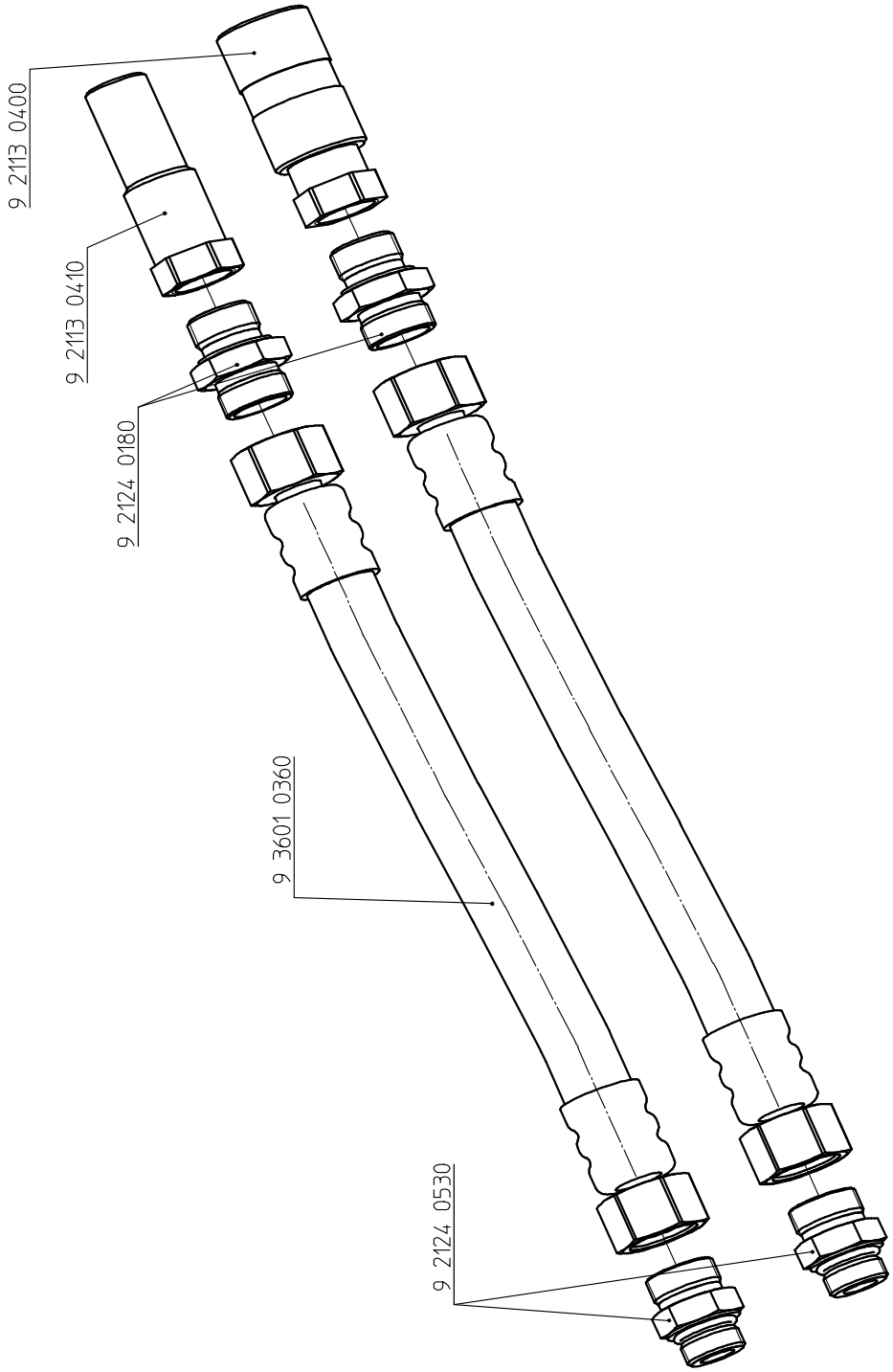

1-800-700-5919 (US/CA)
WWW.CSUNITEC.COM
info@csunitec.com
+1-203-853-9522 (Intl.)

CS UNITEC, Inc.
22 Harbor Ave, Norwalk, CT, 06850, USA
4330 Center St, Deer Park, TX, 77536, USA

www.csunitec.com
+1(203) 853-9522 / 800-700-5919
info@csunitec.com

Tools for the Specialist