Spare Parts List

Description:	Part and Drawing Number:
Hydraulic Sabre Saw	5 1219 0010
	Page no.: 1/2 Date: 08/07

Item	Qty.	Description	Part and Drawing no.		Remarks
1	1	Geared motor	5 1219 1000		see extra list
2	1	Gear box head	5 1216 4000		see extra list
3	1	Handle with controller	5 1216 6980		see extra list
20	1	Pinion	5 1216 4170		
21	1	Grooved ball bearing	9 1003 0470		
22	1	Sealing	5 1218 4190		
83	4	Fillister-head screw	9 1110 3120		

Spare Parts List

Description:	Part and Drawing Number:	
Hydraulic **Sabre Saw**	**5 1219 0010**	
	Page no.: 2/2	Date: 08/07

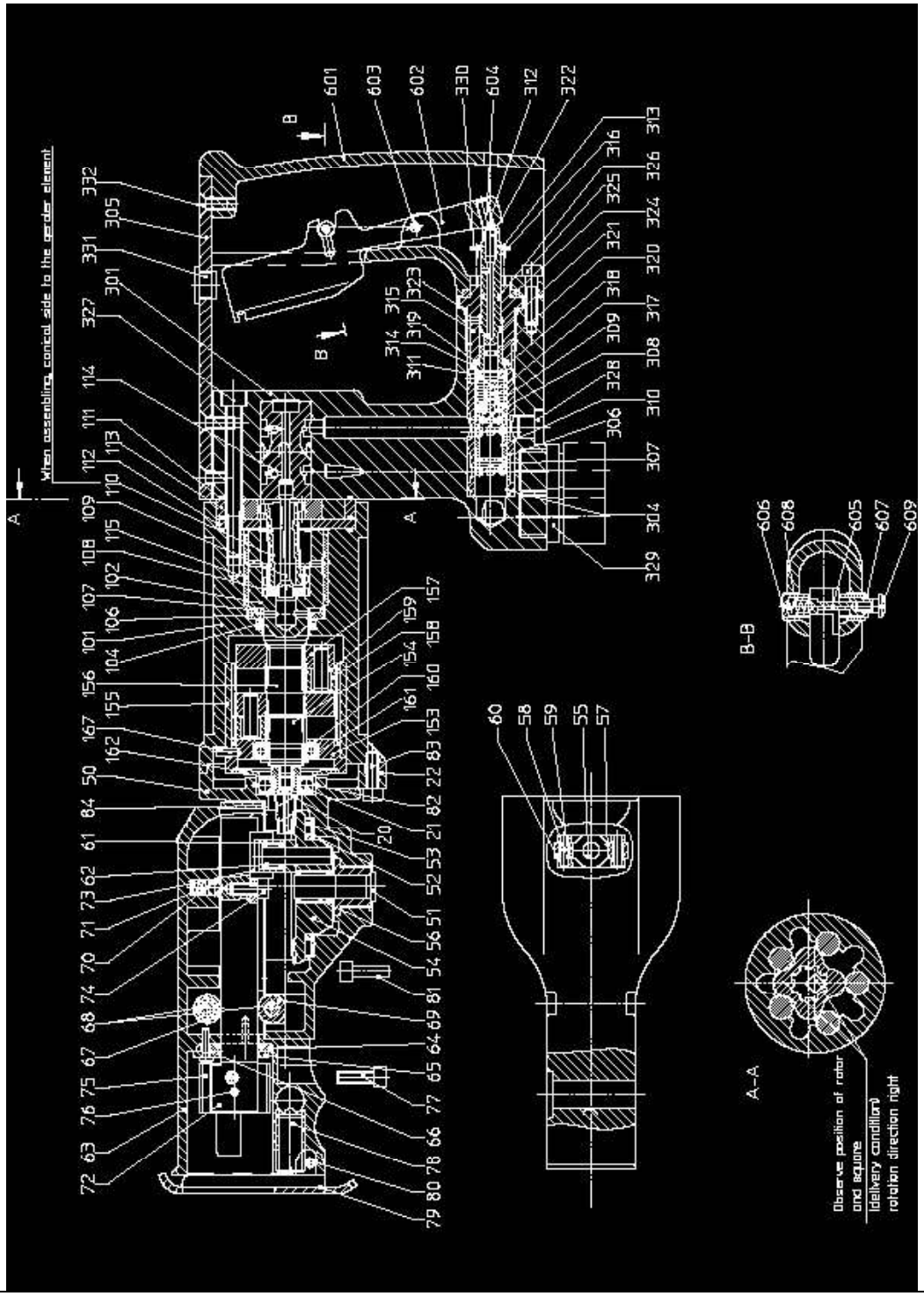

Spare Parts List

Description:	Part and Drawing Number:
Gearbox Head	**5 1216 4000**
	Page no.: 1/3 Date: 02/03

Item	Qty.	Desription	Part. and Drawing No.		Remarks
1	1	Covering hood	5 1216 9010		
2	5	Clamp screw	9 1110 3120		
	1	Blade thrust piece, Assy.	5 1216 7920		with item 4
3	1	Blade thrust piece	5 1216 7060		
4	1	Centering pin	9 1630 0360		
	1	Connecting rod, Assy.	5 1216 4950		with item 4
5	1	Connecting rod	5 1216 4260		
6	3	Fillister-head screw	9 1110 1040		
7	1	Gate	5 1216 4310		
8	1	Gasket	5 1216 4320		
9	1	Gearbox casing 2	5 1216 4010		
10	2	Straight pin, hardened	9 1631 0150		
11	1	Needle bearing	9 1013 0450		
13	1	Fillister-head screw	9 1110 3080		
14	1	Spring pressure piece	9 1810 0080		
15	1	Support shoe	5 1216 7070		
16	1	Spiral pin	9 1630 0870		
17	1	Slide block	5 1216 4180		
18	1	Compression spring	9 1803 4360		
19	1	Steel ball	9 1017 0050		
	1	Bevel gear Assy.	5 1216 4930		item 22,23 + 24
22	1	Straight pin, hardened	9 1637 2220		
23	1	Needle sleeve	9 1014 0230		
24	1	Bevel gear	5 1216 4130		
25	1	Axial needle bearing	9 1024 0400		
26	1	Axial washer	9 1024 0410		
27	4	Fillister-head screw	9 1110 3100		
	1	Gearbox casing 1, Assy.	5 1216 4920		with items 28+30
28	1	Gearbox casing 1	5 1216 4210		
29	1	O-Ring	9 1921 1430		
30	1	Axle	5 1216 4270		

Spare Parts List

Description:	Part and Drawing Number:
Gearbox Head	**5 1216 4000**
	Page no.: 2/3 — Date: 02/03

Item	Qty.	Description	Part and Drawing No.		Remarks
120	1	Roller guide	5 1216 4370		
	2	Needle bearing, Assy.	5 1216 4970		with Items 121,122,123
121	2	Needle bearing	9 1015 1130		
122	2	Sleeve	5 1216 4380		
123	2	Needle roller	9 1016 0280		
124	1	Roller bracket	5 1216 4410		
125	1	Ring	5 1216 4480		
126	1	Needle sleeve	9 1014 0120		

Spare Parts List

Description:	Part and Drawing Number:
Gearbox Head	**5 1216 4000**
	Page no.: 3/3 Date: 02/03

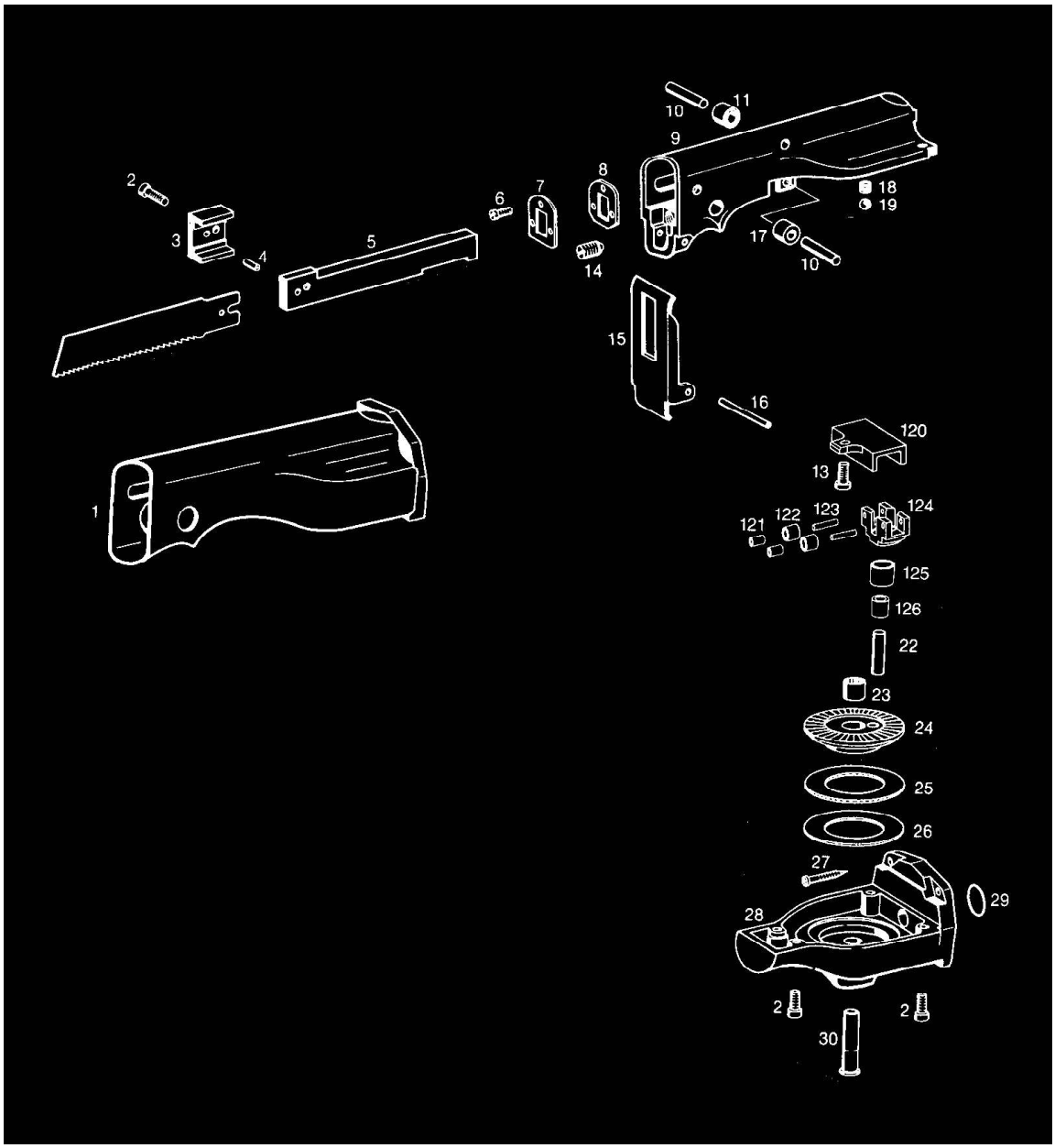

Spare Parts List

Description:	Part and Drawing Number:
Drive Motor hydraulic	**5 1219 1000** Page no.: 1/2 Date: 02/03

Item	Qty.	Description	Part and Drawing No.		Remarks
101	1	Motor housing, Assy.	5 1219 1910		
102	1	Drive shaft	2 2406 1050		
104	1	Radial shaft sealing ring	9 1925 0450		
106	1	Axial washer	9 1024 0360		
107	1	Axial needle ring	9 1024 0370		
108	1	Spacer	9 5501 0040		
109	1	Carrier	9 5501 0140		
110	1	Drive shaft	9 5501 0150		
111	3	O-Ring	9 1921 1240		
112	1	Cover washer	9 5501 0070		
113	1	Geroler-Element	9 5501 0160		
114	1	Rotary slide valve	9 5501 0090		
115	1	Bushing	9 1029 0530		
153	1	Bearing disc	5 1219 1140		
154	1	Pinion shaft	5 1219 4170		
155	1	Sprocket	2 2406 4020		
156	1	Rim of the gear	3 8837 4360		
157	2	Planetary carrier, Assy.	3 8837 4920		
158	6	Planetary wheel	3 8837 4140		
159	6	Needle cage	9 1015 0790		
160	1	Grooved ball bearing	9 1011 0190		
161	1	Snap ring	9 1702 0080		
162	2	Belleville spring	9 1801 0350		
167	2	Cylinder pin	9 1619 1220		

Spare Parts List

Description:	Part and Drawing Number:	
Drive Motor hydraulic	**5 1219 1000**	
	Page no.: 2/2	Date: 02/03

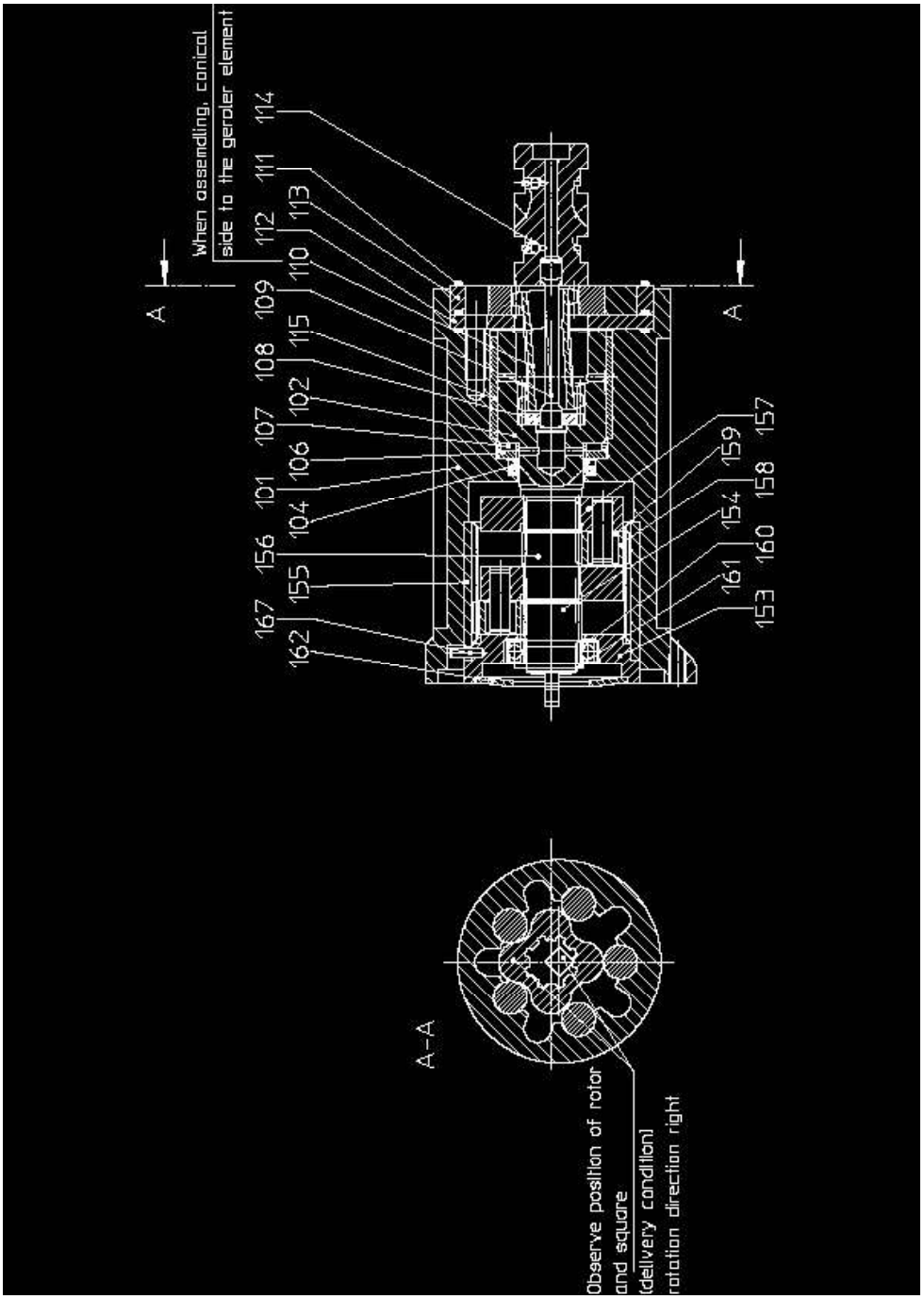

Spare Parts List

Description:	Part and Drawing Number:
Handle with controller	**5 1219 6980**
	Page no.: 1/3 Date: 02/03

Item	Qty.	Description	Part and Drawing No.		Remarks
301	1	Valve housing, Assy.	2 1317 3920		with item 304
304	1	Adjusting sleeve	2 1317 3310		
305	1	Splice plate	2 1317 6040		
306	1	Blind	5 1220 3050		
313	1	Lock washer	9 1706 0140		
316	1	Compression spring	9 1803 3590		
324	1	Ring	9 1903 0270		
325	1	Fillister-head screw	9 1110 3120		
327	5	Fillister-head screw	9 1110 4310		
328	1	Locking screw	9 1174 0010		
329	2	Plug-in screwing	9 2124 0240		
332	4	Counter-sunk screw	9 1113 3010		
	1	**Handle, Assy.**	2 1317 6920		
601	1	Handle	2 1317 6110		
602	1	Valve pusher	2 1317 3030		
603	1	Double notched pin	9 1641 0010		
604	1	Threaded pin	9 1148 3030		
605	1	Panel closure tool	5 1216 3150		
606	1	Compression sleeve	5 1216 3160		
607	1	Guide sleeve	5 1216 3170		
608	1	Compression spring	9 1803 3360		
609	1	Screw button	5 1216 3180		

Spare Parts List

Description:	Part and Drawing Number:
Handle with controller	**5 1219 6980**
	Page no.: 1/3 — Date: 02/03

Item	Qty.	Description	Part and Drawing NO.		Remarks
		Valve seat , Assy.	**2 1317 3300**		item 307-323
307	1	Snap ring	9 1703 0260		
308	1	Fillister-head screw	9 1110 2090		
309	1	Washer	9 3302 0150		
310	1	Adjusting slide	2 1317 3320		
311	1	Spring carrier	2 1317 3070		
312	1	Slide	2 1317 3110		
314	1	Sleeve	2 1317 3090		
315	1	Guide	2 1317 3100		
317	1	Compression spring	9 1803 1700		
318	1	Locking washer	9 1706 0180		
319	1	O-Ring	9 1901 3290		
320	1	O-Ring	9 1901 9800		
321	1	O-Ring	9 1901 2550		
322	1	Threaded pin	9 1148 3030		
323	1	O-Ring	9 1901 6020		
326	1	O-Ring	9 1901 2080		
330	1	Washer	9 3302 0030		

Spare Parts List
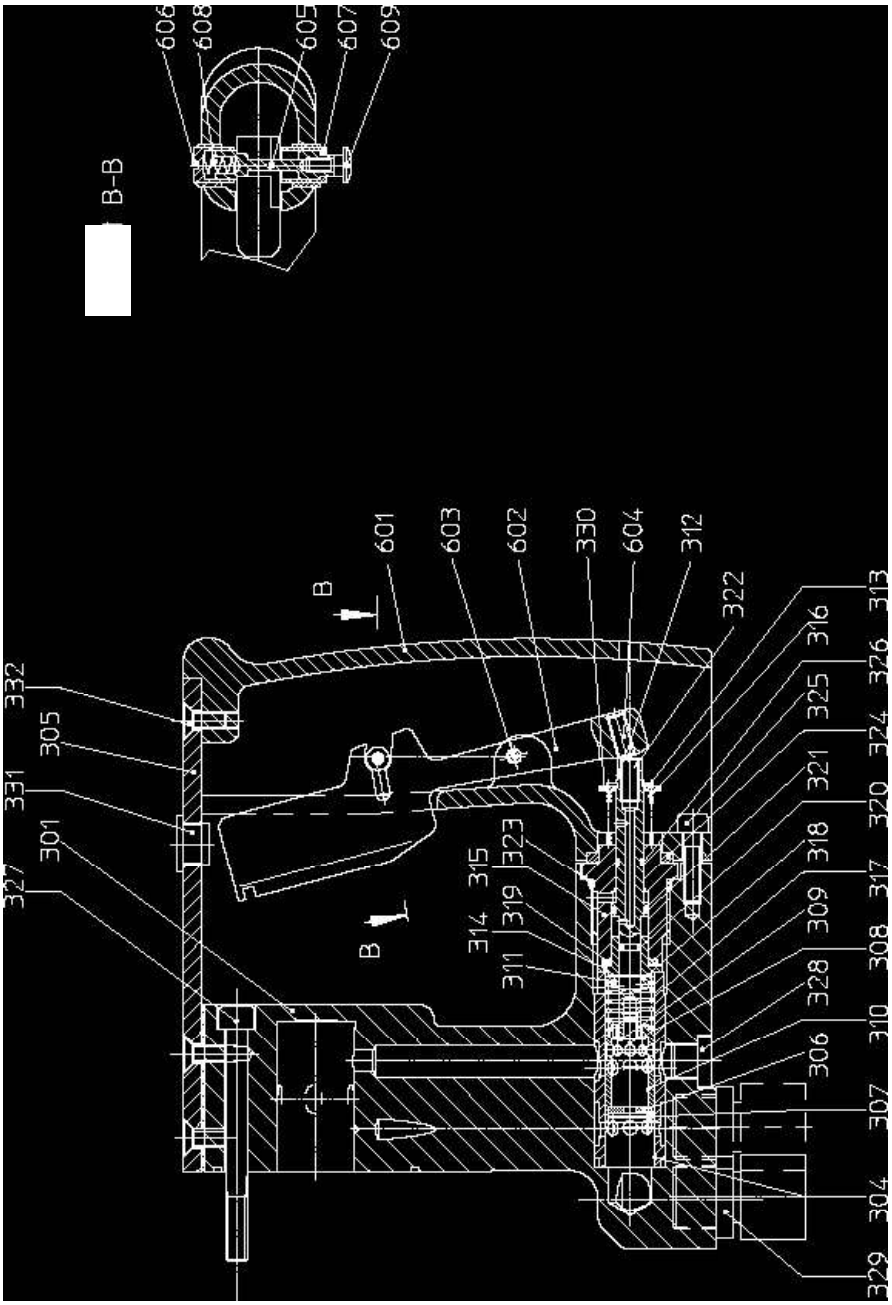
Description:	Part and Drawing Number:	
Handle with controller	**5 1219 6980**	
	Page no.: 3/3	Date: 02/03