CS Unitec, Inc.

Spare Part List	
Description: **Gearbox**	Part and drawing number: **5 6047 4000**

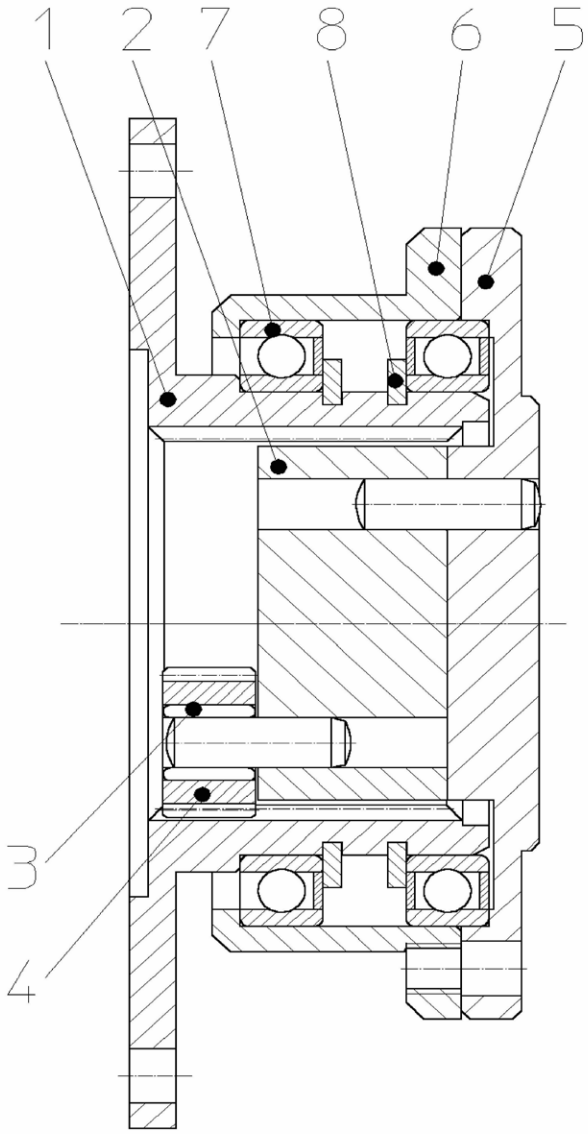

CS UNITEC, Inc.
22 Harbor Ave., Norwalk, CT 06850 • 4330 Center St., Deer Park, TX 77536 USA
800-700-5919 • 203-853-9522 • www.csunitec.com

© 2020 CS Unitec, Inc.

Spare Part List

Description:	Part and drawing number:
Gearbox	**5 6047 4000**

Item	Qty.	Description	Part and drawing no.		Remarks
1	1	Rim of the gear	5 6041 4020		
2	1	Planet carrier Assy.	5 6042 4930		
3	3	Needle cage	9 1015 0790		
4	3	Planetary wheel	5 6030 4040		
5	1	Planet Carrier Assy.	5 6030 4830		
6	1	Bearing ring	5 6030 4580		
7	2	Grooved ball bearing	9 1027 0300		
8	2	Snap ring	9 1702 0210		

CS UNITEC, Inc.
22 Harbor Ave., Norwalk, CT 06850 • 4330 Center St., Deer Park, TX 77536 USA
800-700-5919 • 203-853-9522 • www.csunitec.com
© 2020 CS Unitec, Inc.

CS Unitec, Inc.

Spare Part List	
Description: BAND SAW FRAME	Part and drawing number: 5 6054 7000

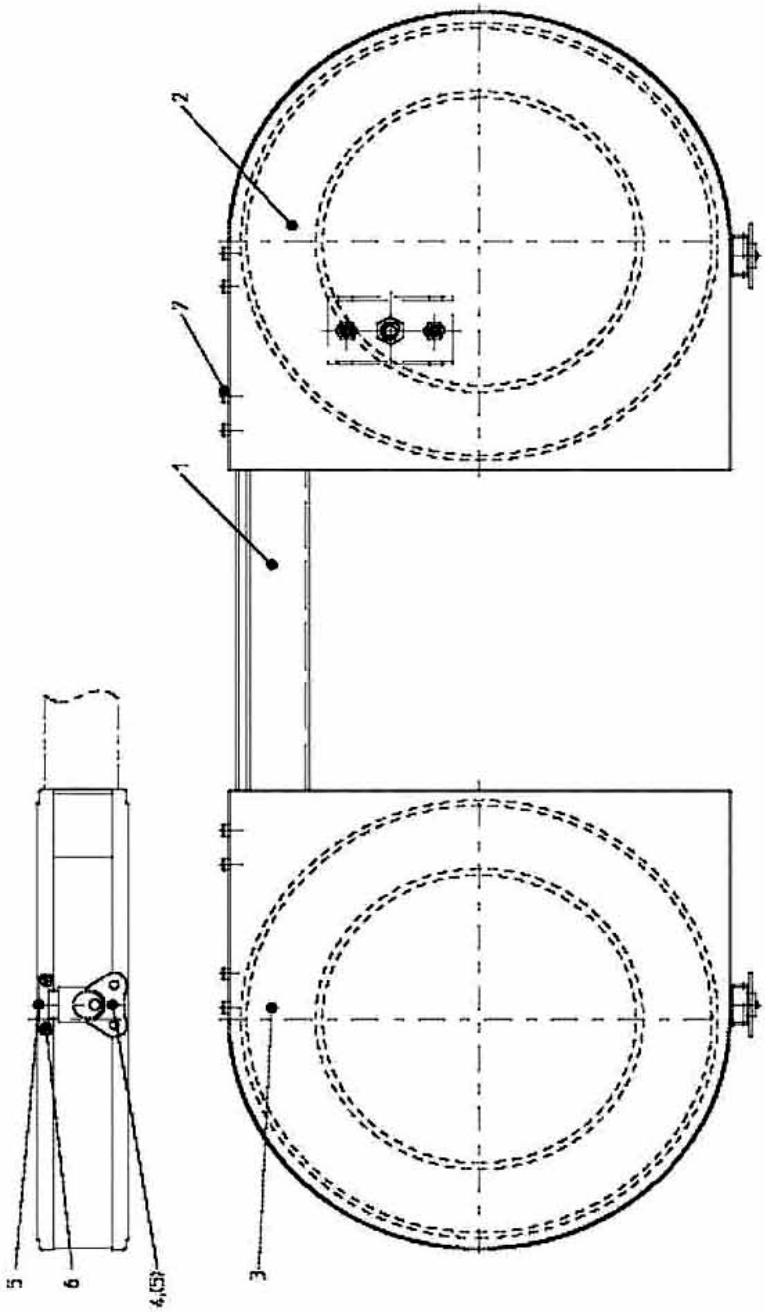

CS UNITEC, Inc.
22 Harbor Ave., Norwalk, CT 06850 • 4330 Center St., Deer Park, TX 77536 USA
800-700-5919 • 203-853-9522 • www.csunitec.com

© 2020 CS Unitec, Inc.

Spare Part List

Description:	Part and drawing number:
Band Saw Head	**5 6054 8000**

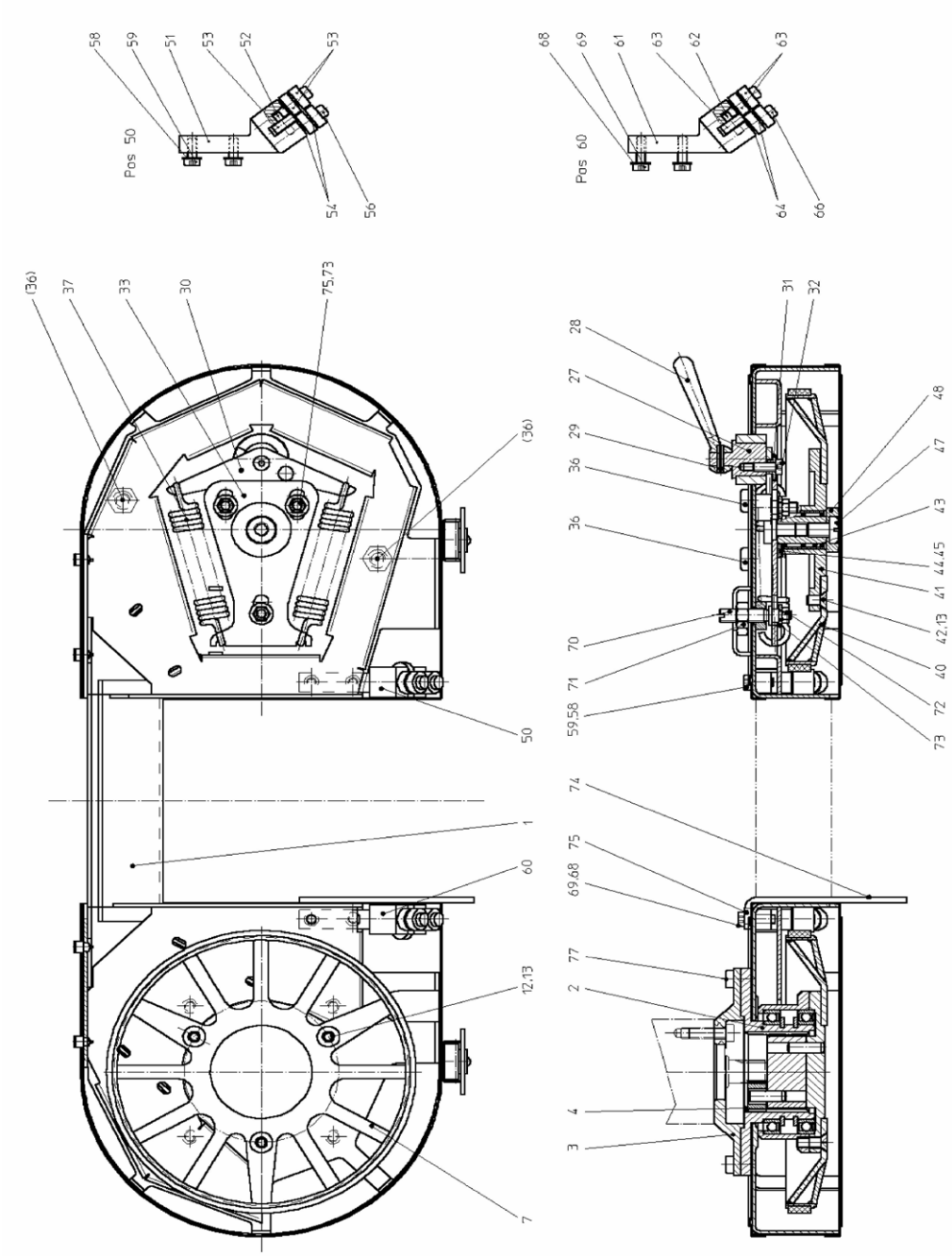

CS UNITEC, Inc.
22 Harbor Ave., Norwalk, CT 06850 • 4330 Center St., Deer Park, TX 77536 USA
800-700-5919 • 203-853-9522 • www.csunitec.com

© 2020 CS Unitec, Inc.

Spare Part List

Description:	Part and drawing number:
Band Saw Head	**5 6054 8000**

Item	Qty.	Description	Part and drawing no.		Remarks
1	1	Band saw frame	5 6054 7000		
2	1	Gearbox	5 6047 4000		
3	1	Adapter flange	5 6041 4030		
4	1	Guard plate	5 6042 1070		
7	1	Drive pulley, Assy.	5 6031 8180		
		consisting of:			
	1	Drive pulley	5 6031 8080		
	1	Pulley tire	5 6031 8050		
12	3	Counter sunk screw with inner hexagon	9 1113 4070		
13	6	Locking plate	9 1714 0040		
27	1	Correcting bolt	5 6030 8360		
28	1	Tapered grip	5 6030 6210		
29	1	Brace	9 1630 0020		
30	1	Frame	5 6003 7040		
31	1	Clamping bushing	5 6003 7060		
32	1	Fillister-head screw	9 1112 3110		
33	1	Spring washer, Assy.	5 6030 7930		
		with:			
	1	Sleeve	5 6030 7280		
36	2	Fillister-head screw	9 1112 5160		
37	2	Tensioning spring	9 1808 0240		
40	1	Drive pulley, Assy.	5 6031 8180		
		besteht aus:			
	1	Drive pulley	5 6031 8080		
	1	Pulley tire	5 6031 8050		
41	1	Bearing ring	5 6030 8580		
42	3	Counter sunk screw w. inner hexagon	9 1113 4080		
43	1	Needle sleeve	9 1014 0330		
44	2	Axial disc	9 3333 0010		
45	1	Washer	9 3325 0870		
47	1	Screw with flat head	9 1116 5020		
48	1	Guard plate	9 3325 0850		

CS UNITEC, Inc.
22 Harbor Ave., Norwalk, CT 06850 • 4330 Center St., Deer Park, TX 77536 USA
800-700-5919 • 203-853-9522 • www.csunitec.com
© 2020 CS Unitec, Inc.

Spare Part List

Description:	Part and drawing number:
Band Saw Head	**5 6054 8000**

Item	Qty.	Description	Part and drawing no.		Remarks
50	1	Guide unit I	5 6031 7980		
51	1	Guide holder	5 6031 8130		
52	1	Pin	9 1619 0170		
53	5	Grooved ball bearing	9 1001 0290		
54	6	Spring washer	9 3322 0060		
55	4	Washer	9 3302 0150		
56	2	Fillister-head screw	9 1110 2020		
58	2	Locking plate	9 3329 0010		
59	2	Fillister-head screw	9 1112 3110		
60	1	Guide unit II	5 6031 7990		mit Pos.61-69
61	1	Guide holder	5 6031 8130		
62	1	Pin	9 1619 0170		
63	5	Grooved ball bearing	9 1001 0290		
64	6	Spring washer	9 3322 0060		
65	4	Washer	9 3302 0150		
66	2	Fillister-head screw	9 1110 2020		
68	2	Locking plate	9 3329 0010		
69	2	Fillister-head screw	9 1112 3150		
70	1	Thread bolt	5 6030 8410		
71	1	Hexagonal nut	9 1203 0310		
72	1	Hexagonal nut	9 1210 0120		
73	3	Washer	9 3302 0020		
74	1	Spacing block	5 6031 8100		
75	2	Hexagonal nut	9 1210 0030		
77	4	Fillister-head screw	9 1112 4100		

© 2020 CS Unitec, Inc.

Spare Part List

Description:	Part and drawing number:
Band Saw Motor	**5 6047 1900**

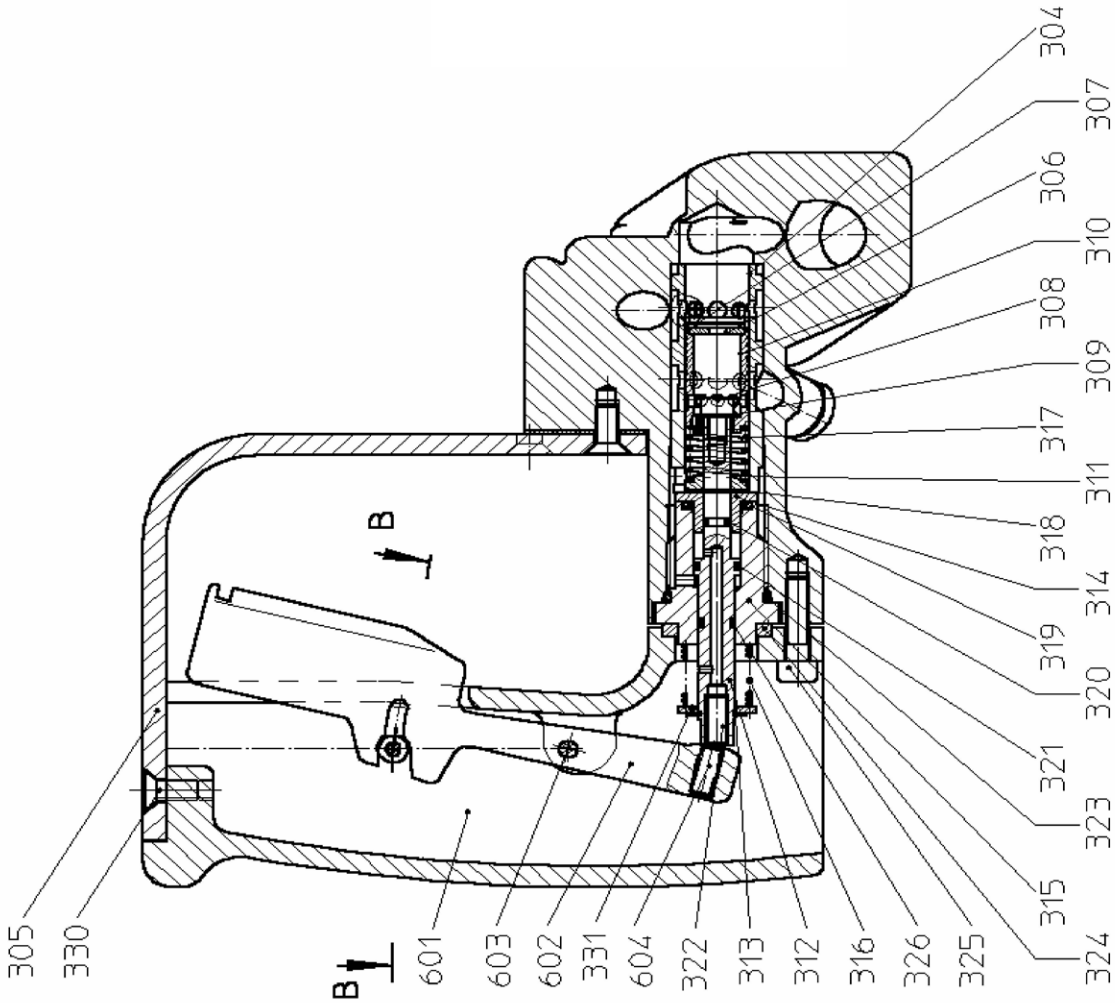

CS UNITEC, Inc.
22 Harbor Ave., Norwalk, CT 06850 • 4330 Center St., Deer Park, TX 77536 USA
800-700-5919 • 203-853-9522 • www.csunitec.com

© 2020 CS Unitec, Inc.

Spare Part List

Description:	Part and drawing number:
Band Saw Motor	**5 6047 1900**

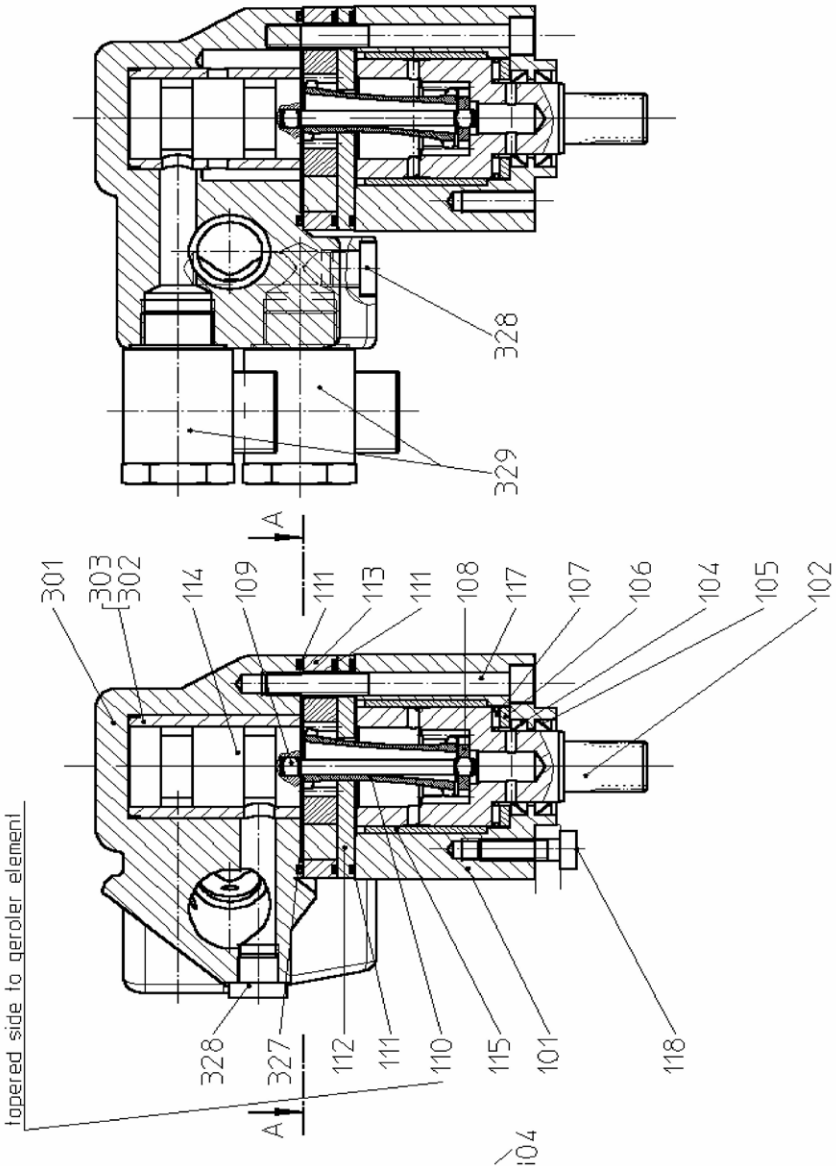

CS UNITEC, Inc.
22 Harbor Ave., Norwalk, CT 06850 • 4330 Center St., Deer Park, TX 77536 USA
800-700-5919 • 203-853-9522 • www.csunitec.com

© 2020 CS Unitec, Inc.

Spare Part List

Description:	Part and drawing number:
Band Saw Motor	**5 6047 1900**

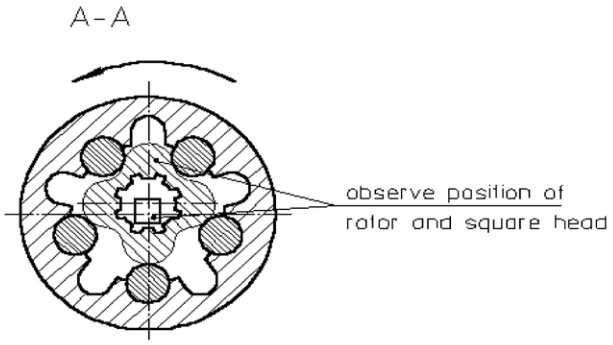

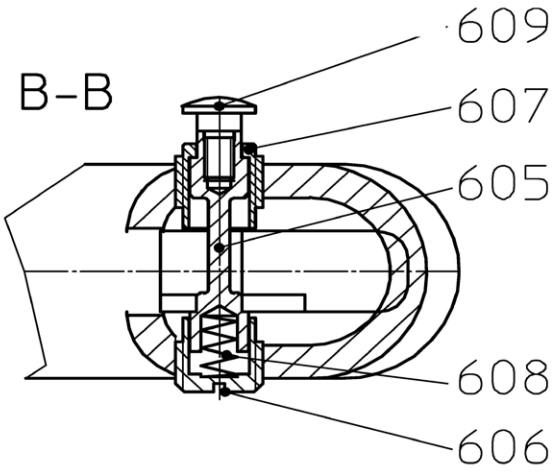

CS UNITEC, Inc.
22 Harbor Ave., Norwalk, CT 06850 • 4330 Center St., Deer Park, TX 77536 USA
800-700-5919 • 203-853-9522 • www.csunitec.com

© 2020 CS Unitec, Inc.

Spare Part List

Description:	Part and drawing number:
Band Saw Motor	**5 6047 1900**

Item	Qty.	Description	Part and drawing no.		Remarks
	1	**Hydraulic motor**	**5 6047 1000**		
101	1	Bearing housing	9 5501 0020		
102	1	Drive shaft	5 6042 1030		
104	1	Shaft sealing ring	9 1925 0450		
105	1	Shaft sealing ring	9 1925 0440		
106	1	Axial disc	9 1024 0360		
107	1	Axial thrust bearing	9 1024 0370		
108	1	Spacer	9 5501 0040		
109	1	Carrier	9 5501 0180		
110	1	Drive shaft	9 5501 0190		
111	3	O-ring	9 1921 1240		
112	1	Cover disc	9 5501 0070		
113	1	Geroler element	9 5501 0200		
114	1	Rotary slide	9 5501 0090		
115	1	Bushing	9 1029 0530		
117	5	Fillister head screw	9 1171 9480		
118	5	Fillister head screw	9 1112 4150		
		Controller, Assy.	**5 6047 3000**		
301	1	Valve housing, Assy.	5 6042 3910		
305	1	Frame	5 6042 6040		
306	1	Gland D=4.0 15lpm	5 1220 3050		
306	1	Gland D=3.5 12lpm	5 1220 3040		
307	1	Snap ring	9 1703 0260		
308	1	Fillister-head screw	9 1110 2090		
309	1	Washer	9 3302 0150		
310	1	Governor piston valve	2 1317 3320		
311	1	Spring plate	2 1317 3070		
312	1	Slide	2 1317 3110		
313	1	Locking plate	9 1706 0140		
314	1	Sleeve	2 1317 3090		
315	1	Guide	2 1317 3100		
316	1	Pressure spring	9 1803 3590		
317	1	Pressure spring	9 1803 1700		
318	1	Loxking plate	9 1706 0180		
319	1	O-Ring	9 1901 3290		

UNITEC
CS UNITEC, Inc.
22 Harbor Ave., Norwalk, CT 06850 • 4330 Center St., Deer Park, TX 77536 USA
800-700-5919 • 203-853-9522 • www.csunitec.com
© 2020 CS Unitec, Inc.

Spare Part List

Description:	Part and drawing number:
Band Saw Motor	**5 6047 1900**

Item	Qty.	Description	Part and drawing no.		Remarks
320	1	O-ring	9 1901 9800		
321	1	O-ring	9 1901 2550		
322	1	Threaded pin	9 1148 3030		
323	1	O-ring	9 1901 6020		
324	1	Gasket	9 1903 0270		
325	1	Fillister-head screw	9 1110 3120		
326	1	O-ring	9 1901 2080		
328	2	Locking screw	9 1174 0010		
329	2	Pivot screwing	9 2126 0240		
330	4	Countersunk screw w. inner hexagon	9 1113 3010		
331	1	Washer	9 3302 0030		
		Handle, Assy.	**2 1317 6920**		
601	1	Handle	2 1317 6110		
602	1	Valve lever	2 1317 3030		
603	1	Double-notched taper pin	9 1641 0010		
604	1	Threaded pin	9 1148 3030		
605	1	Locking slide	5 1216 3150		
606	1	Pressure sleeve	5 6011 3160		
607	1	Guide sleeve	5 1216 3170		
608	1	Pressure spring	9 1803 3360		
614	1	Screw button	5 1216 3180		

© 2020 CS Unitec, Inc.